| | | |
|---|---|---|
| **DTC** | **C0200/31** | **Front Speed Sensor RH Circuit** |
| **DTC** | **C0205/32** | **Front Speed Sensor LH Circuit** |
| **DTC** | **C1235/35** | **Foreign Object is Attached on Tip of Front Speed Sensor RH** |
| **DTC** | **C1236/36** | **Foreign Object is Attached on Tip of Front Speed Sensor LH** |
| **DTC** | **C1271/71** | **Low Output Signal of Front Speed Sensor RH (Test Mode DTC)** |
| **DTC** | **C1272/72** | **Low Output Signal of Front Speed Sensor LH (Test Mode DTC)** |
| **DTC** | **C1275/75** | **Abnormal Change in Output Signal of Front Speed Sensor RH (Test Mode DTC)** |
| **DTC** | **C1276/76** | **Abnormal Change in Output Signal of Front Speed Sensor LH (Test Mode DTC)** |

## DESCRIPTION

The speed sensor detects wheel speed and transmits the appropriate signals to the ECU. These signals are used for control of the ABS control system. The front and rear rotors have 48 serrations each. When the rotors rotate, the magnetic field generated by the permanent magnet in the speed sensor induces an AC voltage.

Since the frequency of this AC voltage changes in direct proportion to the speed of the rotor, the frequency is used by the ECU to detect the speed of each wheel.

DTCs C1271/71 to C1276/76 can be deleted when the speed sensor sends a vehicle speed signal or the Test Mode ends. DTCs C1271/71 to C1276/76 are output only in the Test Mode.

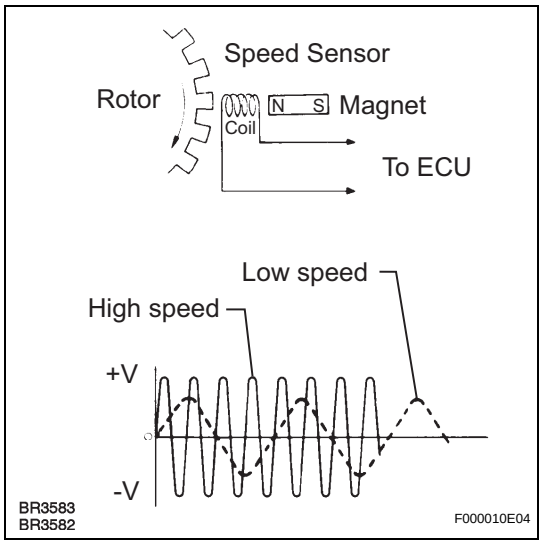


BC

| DTC No. | DTC Detection Condition | Trouble Area |
|---|---|---|
| C0200/31<br>C0205/32 | With vehicle speed at 10 km/h (6 mph) or more, sensor signal circuit of faulty wheel is open or short for 1 second or more.<br>• Momentary interruption of sensor signal of faulty wheel has occurred 7 times or more.<br>• Sensor signal circuit is open for 0.5 seconds or more. | • Front speed sensor RH/LH<br>• Front speed sensor RH/LH circuit<br>• Speed sensor rotor<br>• Sensor installation<br>• Brake actuator assembly |
| C1235/35<br>C1236/36 | At vehicle speed of 20 km/h (12 mph) or more, condition that noise is included in speed sensor signal continues for 5 seconds or more. | • Front speed sensor RH/LH<br>• Speed sensor rotor<br>• Sensor installation<br>• Brake actuator assembly |

HINT:
- DTC No. C0200/31 and C1235/35 are for the front speed sensor RH.
- DTC No. C0205/32 and C1236/36 are for the front speed sensor LH.

## WIRING DIAGRAM

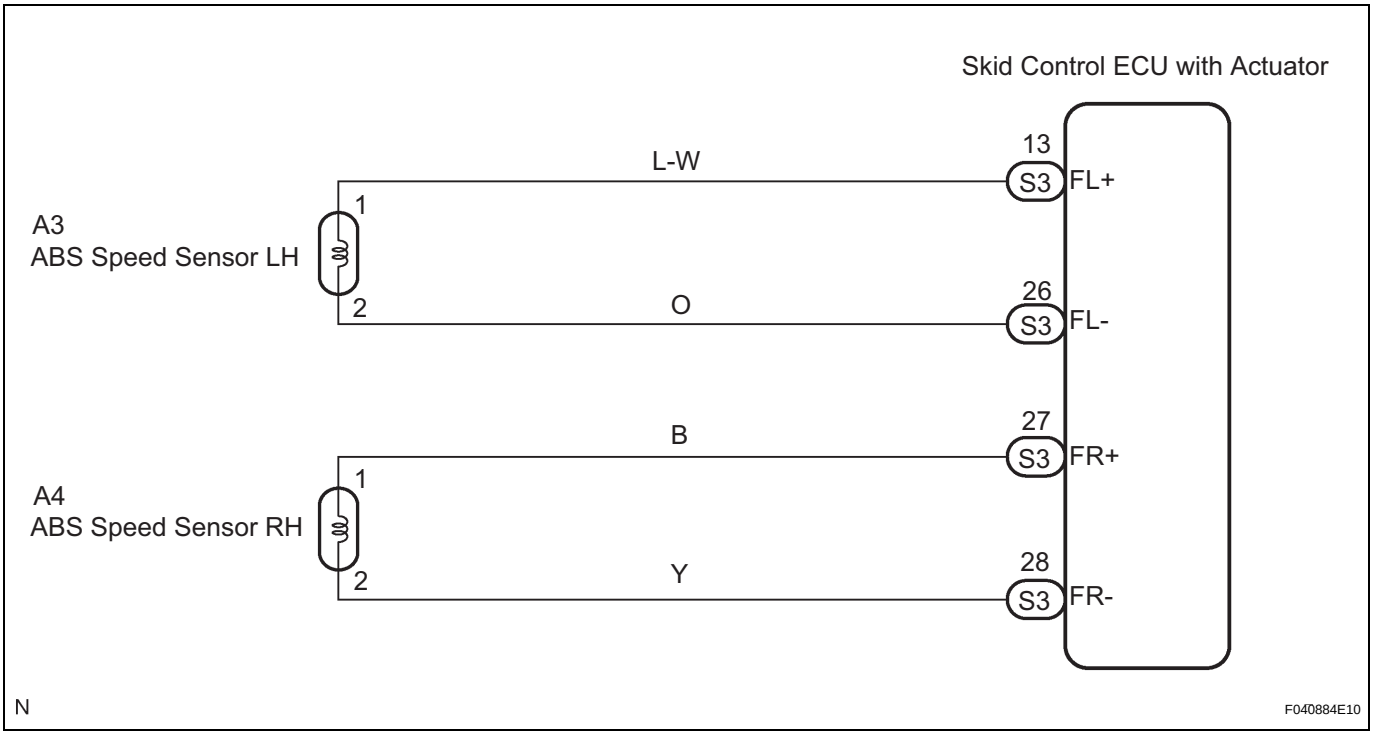


## INSPECTION PROCEDURE

HINT:
Start the inspection from step 1 when using the intelligent tester and start from step 2 when not using the intelligent tester.

| 1 | READ VALUE OF INTELLIGENT TESTER (FRONT SPEED SENSOR) |
|---|---|

(a) Select the DATA LIST mode on the intelligent tester.

BC

**ABS:**

| Item (Display) | Measurement Item / Range (Display) | Normal Condition | Diagnostic Note |
|---|---|---|---|
| WHEEL SPD FR | Wheel speed sensor (FR) reading / min.: 0 km/h (0 mph), max.: 326 km/h(202 mph) | Actual wheel speed | Similar speed as indicated on speedometer |

| Item (Display) | Measurement Item / Range (Display) | Normal Condition | Diagnostic Note |
|---|---|---|---|
| WHEEL SPD FL | Wheel speed sensor (FL) reading / min.: 0 km/h (0 mph), max.: 326 km/h(202 mph) | Actual wheel speed | Similar speed as indicated on speedometer |

(b) Check that there is the speed value output from the speed sensor displayed on the intelligent tester and the speed value displayed on the speedometer are almost the same when driving the vehicle.

**OK:**

**The speed value output from the speed sensor displayed on the intelligent tester is the same as the actual vehicle speed.**

**NG** → **Go to step 3**

**OK**

## 2 PERFORM TEST MODE INSPECTION (SIGNAL CHECK)

(a) Clear the DTC (See page BC-10).

(b) Perform sensor signal check in TEST MODE PROCEDURE (See page BC-3).

**OK:**

**All Test Mode DTCs are erased.**

**OK** → **Go to step 8**

**NG**

## 3 INSPECT FRONT SPEED SENSOR INSTALLATION

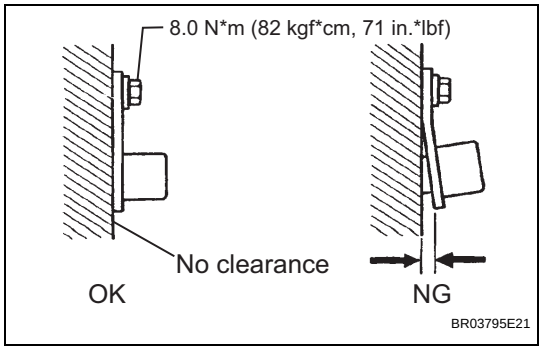


(a) Turn the ignition switch off.

(b) Check the speed sensor installation.

**OK:**

**The installation bolt is tightened properly.**

**There is no clearance between the sensor and the front steering knuckle.**

**Torque:**

**8.0 N*m (82 kgf*cm, 71 in.*lbf)**

**NOTICE:**

**Check the speed sensor signal after replacement (See page BC-3).**

**NG** → **INSTALL FRONT SPEED SENSOR CORRECTLY**

**OK**

## 4 INSPECT SPEED SENSOR TIP

(a) Remove the front speed sensor (See page BC-187).

(b) Check the sensor tip.

BC

**OK:**

**No scratches or foreign matter on the sensor tip.**

**NOTICE:**

**Check the speed sensor signal after cleaning or replacement (See page BC-3).**

**NG** → **REPLACE DRIVE SHAFT ASSEMBLY**

**OK**

## 5 INSPECT FRONT SPEED SENSOR

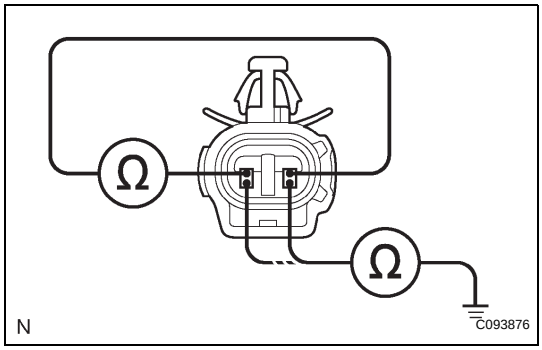


(a) Install the front speed sensor.
(b) Disconnect the front speed sensor connector.
(c) Measure the resistance according to the value(s) in the table below.

**Standard resistance:**

**RH**

| Tester Connection | Specified Condition |
|---|---|
| A4-1 (FR+) - A4-2 (FR-) | 1.6+-0.2 kΩ at 20°C |
| A4-1 (FR+) - Body ground | 10 kΩ or higher |
| A4-2 (FR-) - Body ground | 10 kΩ or higher |

**LH**

| Tester Connection | Specified Condition |
|---|---|
| A3-1 (FL+) - A3-2 (FL-) | 1.6+-0.2 kΩ at 20°C |
| A3-1 (FL+) - Body ground | 10 kΩ or higher |
| A3-2 (FL-) - Body ground | 10 kΩ or higher |

**NOTICE:**

**Check the speed sensor signal after replacement (See page BC-3).**

**NG** → **REPLACE FRONT SPEED SENSOR**

**OK**

## 6 CHECK HARNESS AND CONNECTOR (BETWEEN SKID CONTROL ECU AND FRONT SPEED SENSOR)

**Skid control ECU (Wire Harness Side) Connector Front View:**

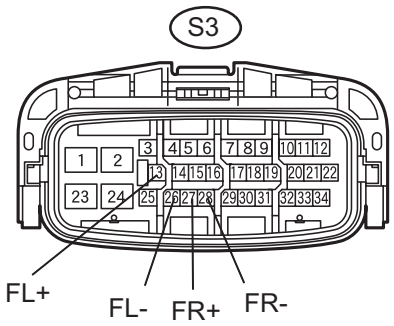


**Front Speed Sensor (Wire Harness Side) Connector Front View:**

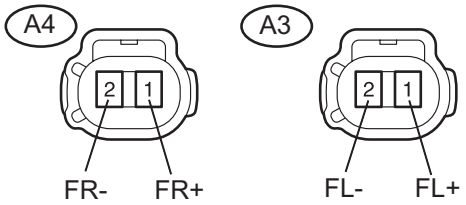


C

C161174E02

(a) Disconnect the skid control sensor wire.
(b) Measure the resistance according to the value(s) in the table below.

**Standard resistance**

**RH:**

| Tester Connection | Specified Condition |
|---|---|
| S3-27 (FR+) - A4-1 (FR+) | Below 1 Ω |
| S3-27 (FR+) - Body ground | 10 kΩ or higher |
| S3-28 (FR-) - A4-2 (FR-) | Below 1 Ω |
| S3-28 (FR-) - Body ground | 10 kΩ or higher |

**LH:**

| Tester Connection | Specified Condition |
|---|---|
| S3-13 (FL+) - A3-1 (FL+) | Below 1 Ω |
| S3-13 (FL+) - Body ground | 10 kΩ or higher |
| S3-26 (FL-) - A3-2 (FL-) | Below 1 Ω |
| S3-26 (FL-) - Body ground | 10 kΩ or higher |

**NG** → **REPAIR OR REPLACE HARNESS OR CONNECTOR**

**OK**

## 7 INSPECT SPEED SENSOR AND SENSOR ROTOR SERRATIONS

**Normal Signal Waveform:**

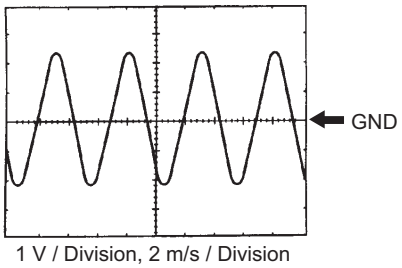


W004200E03

(a) Connect the oscilloscope to terminals FR+ - FR- or FL+ - FL- of the skid control ECU.
(b) Drive the vehicle at about 30 km/h(19 mph), and check the signal waveform.

**OK:**

**A waveform as shown in the figure should be output.**

HINT:

- As vehicle speed (wheel rotation speed) increases, the width of the waveform narrows and the fluctuation in the output voltage becomes greater.
- When noise is identified in the waveform on the oscilloscope, error signals are generated due to rotor scratches, looseness or foreign matter attached to the speed sensor.

**NG** → **Go to step 9**

BC

OK

| 8 | RECONFIRM DTC |
|---|---|

(a) Clear the DTCs (See page BC-10).
(b) Drive the vehicle at a speed of approximately 32 km/h (20 mph) or more for 60 seconds or more.
(c) Check that the same DTCs are recorded (See page BC-10).
HINT:
Reinstall the sensors, connectors, etc. and restore the vehicle to its prior condition before rechecking for DTCs.

**Result**

| Condition | Proceed to |
|---|---|
| DTCs (C0200/31, C0205/32, C1235/35 and C1236/36) are output | A |
| DTCs (C0200/31, C0205/32, C1235/35 and C1236/36) are not output (When troubleshooting in accordance with the DTC CHART) | B |
| DTCs (C0200/31, C0205/32, C1235/35 and C1236/36) are not output (When troubleshooting in accordance with the PROBLEM SYMPTOMS TABLE) | C |

B → END

C → PROCEED TO NEXT CIRCUIT INSPECTION SHOWN IN PROBLEM SYMPTOMS TABLE

A

| 9 | INSPECT SPEED SENSOR ROTOR |
|---|---|

(a) Turn the ignition switch off.
(b) Remove the front drive shaft (See page DS-5).
(c) Check the rotor.
**OK:**
**No scratches, oil, or foreign matter on the rotors.**
**NOTICE:**
**Check the speed sensor signal after cleaning or replacement (See page BC-3).**

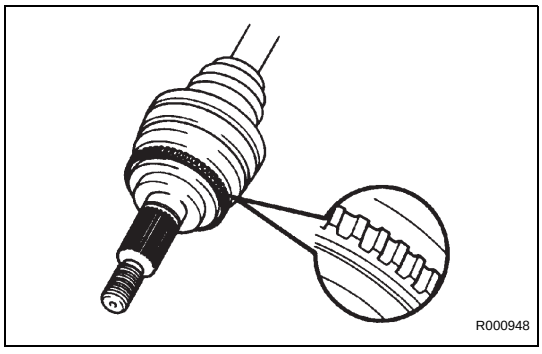


NG → CLEAN OR REPLACE DRIVE SHAFT ASSEMBLY

OK

REPLACE BRAKE ACTUATOR ASSEMBLY