DTC	C0273/13	Open in ABS Motor Relay Circuit

DTC	C0274/14	Short to B+ in ABS Motor Relay Circuit

DESCRIPTION

The ABS motor relay supplies power to the ABS pump motor. While the ABS is activated, the ECU turns the motor relay on and operates the ABS pump motor.
If the voltage supplied to the motor relay (+BM) is below the DTCs detection threshold due to low voltage from the battery/alternator, the DTCs may be stored.

DTC No.	DTC Detection Condition	Trouble Area
C0273/13	With the IG1 terminal voltage 10 V or less during initial check or ABS control, pump motor relay is turned ON and relay contact is not ON for 0.2 seconds or more.	• ABS 1 fuse • ABS motor relay • ABS motor relay circuit • Brake actuator assembly
C0274/14	The motor contact is ON for 3 seconds or more when the motor relay is OFF.	• ABS 1 fuse • ABS motor relay • ABS motor relay circuit • Brake actuator assembly

WIRING DIAGRAM

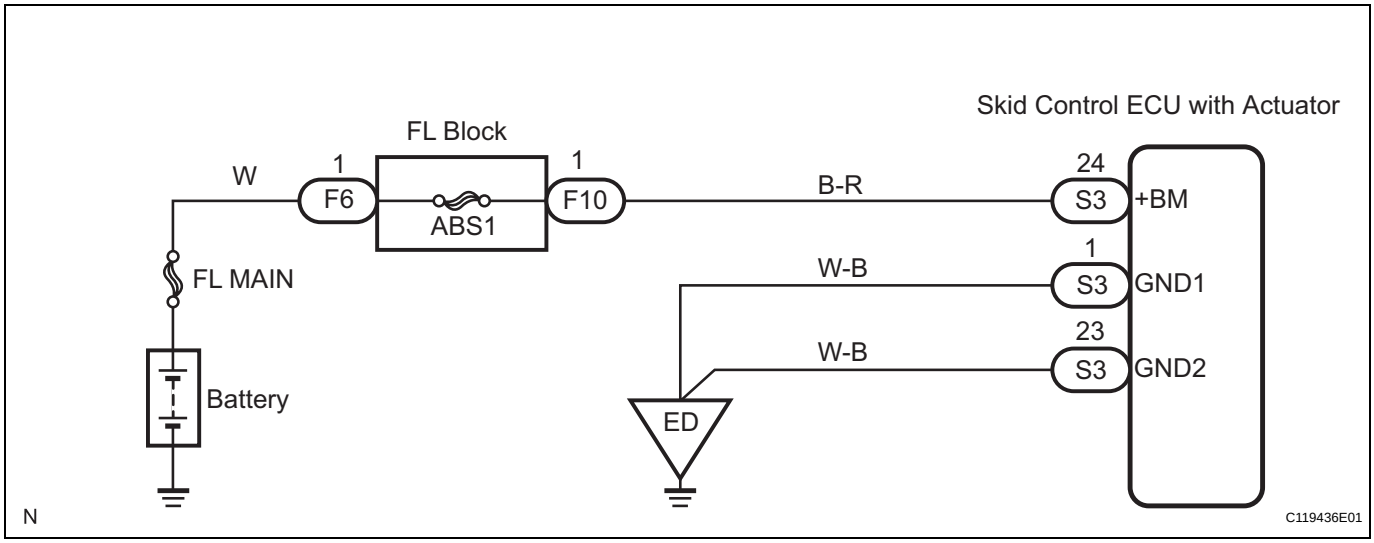

INSPECTION PROCEDURE

HINT:
After steps 1, 2 and 3 are completed, start the inspection from step 4 when using the intelligent tester, and from step 5 when not using the intelligent tester.

1	INSPECT FUSE (ABS 1 FUSE)

(a) Remove the ABS 1 fuse from the FL block.
(b) Measure the resistance according to the value(s) in the table below.

Standard resistance

Tester Connection	Specified Condition
ABS 1 (50 A) fuse	Below 1 Ω (Continuity)

BC

NG → REPLACE FUSE (ABS 1 FUSE)

OK

2 INSPECT SKID CONTROL ECU (+BM TERMINAL VOLTAGE)

Skid Control ECU (Wire Harness Side)

Connector Front View:

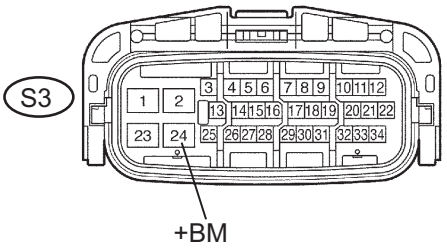

C113872E02

(a) Install the ABS 1 fuse.
(b) Disconnect the skid control ECU connector.
(c) Measure the voltage according to the value(s) in the table below.

Standard voltage

Tester Connection	Condition	Specified Condition
S3-24 (+BM) - Body ground	Always	10 to 14 V

NG → REPAIR OR REPLACE HARNESS OR CONNECTOR (+BM CIRCUIT)

OK

3 INSPECT SKID CONTROL ECU (GND TERMINAL CONTINUITY)

Skid Control ECU (Wire Harness Side)

Connector Front View:

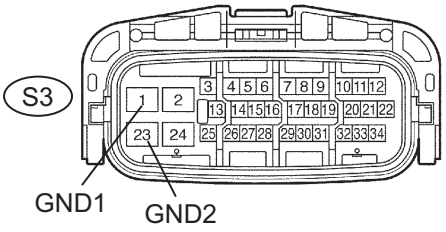

C058919E22

(a) Measure the resistance according to the value(s) in the table below.

Standard resistance

Tester Connection	Specified Condition
S3-1 (GND1) - Body ground	Below 1 Ω
S3-23 (GND2) - Body ground	Below 1 Ω

NG → REPAIR OR REPLACE HARNESS OR CONNECTOR (GND CIRCUIT)

OK

4 PERFORM ACTIVE TEST BY INTELLIGENT TESTER (ABS MOTOR RELAY)

(a) Reconnect the skid control ECU connector.
(b) Connect the intelligent tester to the DLC3.
(c) Turn the ignition switch to the ON position and turn the intelligent tester main switch on.
(d) Start the engine.
(e) Select the ACTIVE TEST mode on the intelligent tester.

ABS:

Item (Display)	Vehicle Condition / Test Details	Diagnostic Note
ABS MOT RELAY	Turns ABS motor relay ON / OFF	Operating sound of motor is heard

BC

(f) Check operating sound of the ABS motor when operating it with the intelligent tester.
OK:
The operating sound of the ABS motor is heard.

NG → **REPLACE BRAKE ACTUATOR ASSEMBLY**

OK

5	RECONFIRM DTC

(a) Clear the DTCs (See page BC-10).
(b) Start the engine.
(c) Drive the vehicle at the speed of 6 km/h (4 mph) or more.
(d) Check that the same DTCs are recorded (See page BC-10).
HINT:
- Reinstall the sensors, connectors, etc. and restore the vehicle to its prior condition before rechecking for DTCs.
- If a speed signal of 6 km/h (4 mph) or more is input to the skid control ECU, with the ignition switch on and the stop light switch off, the ECU performs self-diagnosis of the motor and solenoid circuits.

Result

Condition	Proceed to
DTCs (C0273/13 and C0274/14) are output	A
DTCs (C0273/13 and C0274/14) are not output	B

HINT:
- If any DTCs are output while jiggling a connector or wire harness of the brake actuator (skid control ECU), inspect and repair the connector or wire harness.
- If the normal system code is output, slightly jiggle the connectors, wire harnesses, and fuses of the brake actuator assembly. Make sure that no DTCs are output.
- These DTCs may be stored due to a malfunction in the connector terminal connection, etc.

B → **END**

A

REPLACE BRAKE ACTUATOR ASSEMBLY