ABS Warning Light Remains ON

DESCRIPTION

If any of the following is detected, the ABS warning light remains on.

- The skid control ECU connectors are disconnected from the skid control ECU.
- There is a malfunction in the skid control ECU internal circuit.
- There is an open in the harness between the combination meter and the skid control ECU.

HINT:

In some cases, the intelligent tester cannot be used when the skid control ECU is abnormal.

WIRING DIAGRAM

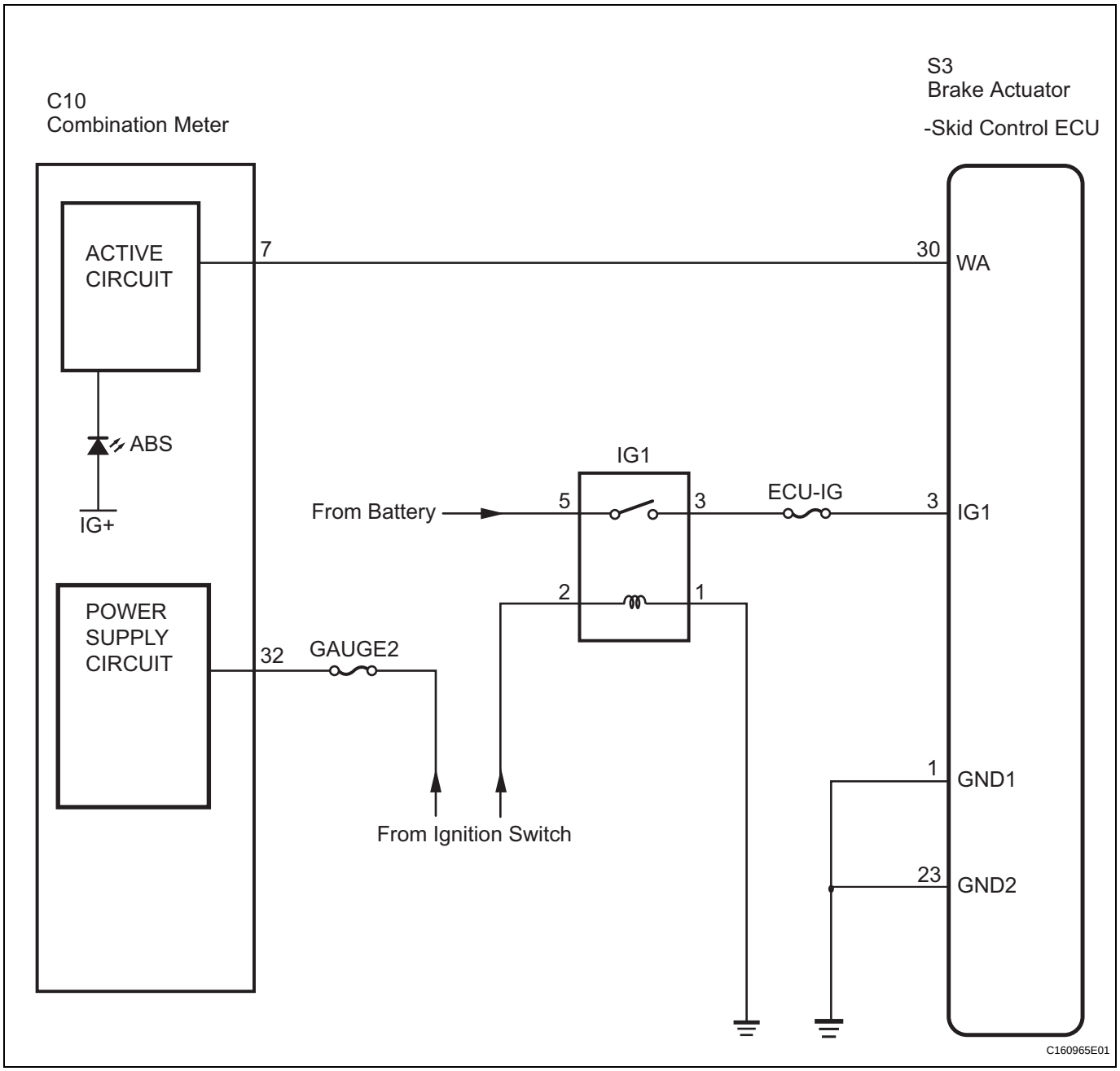

BC

INSPECTION PROCEDURE

1	INSPECT SKID CONTROL ECU CONNECTOR IS SECURELY CONNECTED

(a) Check the skid control ECU connector's connecting condition.
OK:
The connector should be securely connected.

NG → **CONNECT CONNECTOR TO ECU CORRECTLY**

OK ↓

2	INSPECT BATTERY

(a) Check the battery voltage.
Standard voltage:
11 to 14 V

NG → **INSPECT CHARGING SYSTEM**

OK ↓

3	INSPECT SKID CONTROL ECU (IG1 TERMINAL VOLTAGE)

Skid Control ECU (Wire Harness Side)
Connector Front View:

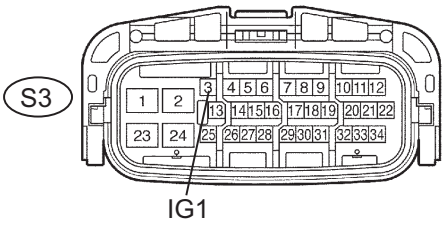

C058919E24

(a) Disconnect the skid control ECU connector.
(b) Turn the ignition switch to the ON position.
(c) Measure the voltage according to the value(s) in the table below.
Standard voltage

Tester Connection	Specified Condition
S3-3 (IG1) - Body ground	10 to 14 V

NG → **REPAIR OR REPLACE HARNESS OR CONNECTOR (IG1 CIRCUIT)**

OK ↓

4	INSPECT SKID CONTROL ECU (GND TERMINAL CONTINUITY)

Skid Control ECU (Wire Harness Side)
Connector Front View:

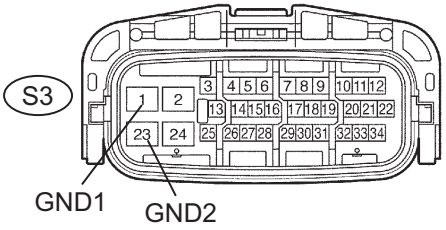

C058919E22

(a) Turn the ignition switch off.
(b) Measure the resistance according to the value(s) in the table below.
Standard resistance

Tester Connection	Specified Condition
S3-1 (GND1) - Body ground	Below 1 Ω
S3-23 (GND2) - Body ground	Below 1 Ω

NG → **REPAIR OR REPLACE HARNESS OR CONNECTOR (GND CIRCUIT)**

BC

OK

5	CHECK HARNESS AND CONNECTOR (BETWEEN SKID CONTROL ECU AND COMBINATION METER ASSEMBLY)

Skid Control ECU (Wire Harness Side) Connector Front View:

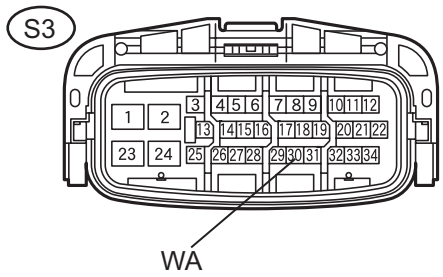

Combination Meter Assembly Wire Harness View:

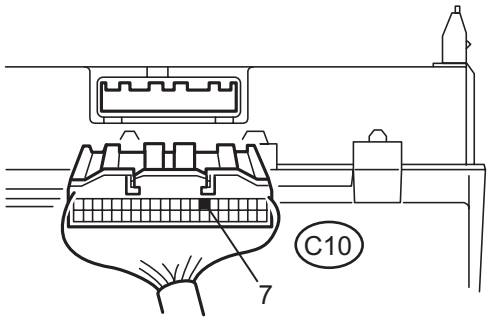

C C111162E04

(a) Disconnect the combination meter connector.
(b) Measure the resistance according to the value(s) in the table below.

Standard resistance

Tester Connection	Specified Condition
S3-30 (WA) - C10-7	Below 1 Ω
S3-30 (WA) - Body ground	10 kΩ or higher

NG → **REPAIR OR REPLACE HARNESS OR CONNECTOR**

OK

6	INSPECT COMBINATION METER ASSEMBLY

(a) Check the combination meter (See page ME-4).
HINT:
If troubleshooting has been carried out according to the PROBLEM SYMPTOMS TABLE, refer back to the table and proceed to the next step before replacing the part (See page BC-7).

NG → **REPLACE COMBINATION METER ASSEMBLY**

OK

REPLACE BRAKE ACTUATOR ASSEMBLY

BC