Brake Warning Light Remains ON

DESCRIPTION

If the ECU detects a trouble, it turns on the brake warning light at the same time of prohibiting ABS control.
At this time, the ECU records a DTC in memory.
Connect terminals TC and CG of the DLC3 to make the brake warning light blink and output the DTC.

WIRING DIAGRAM

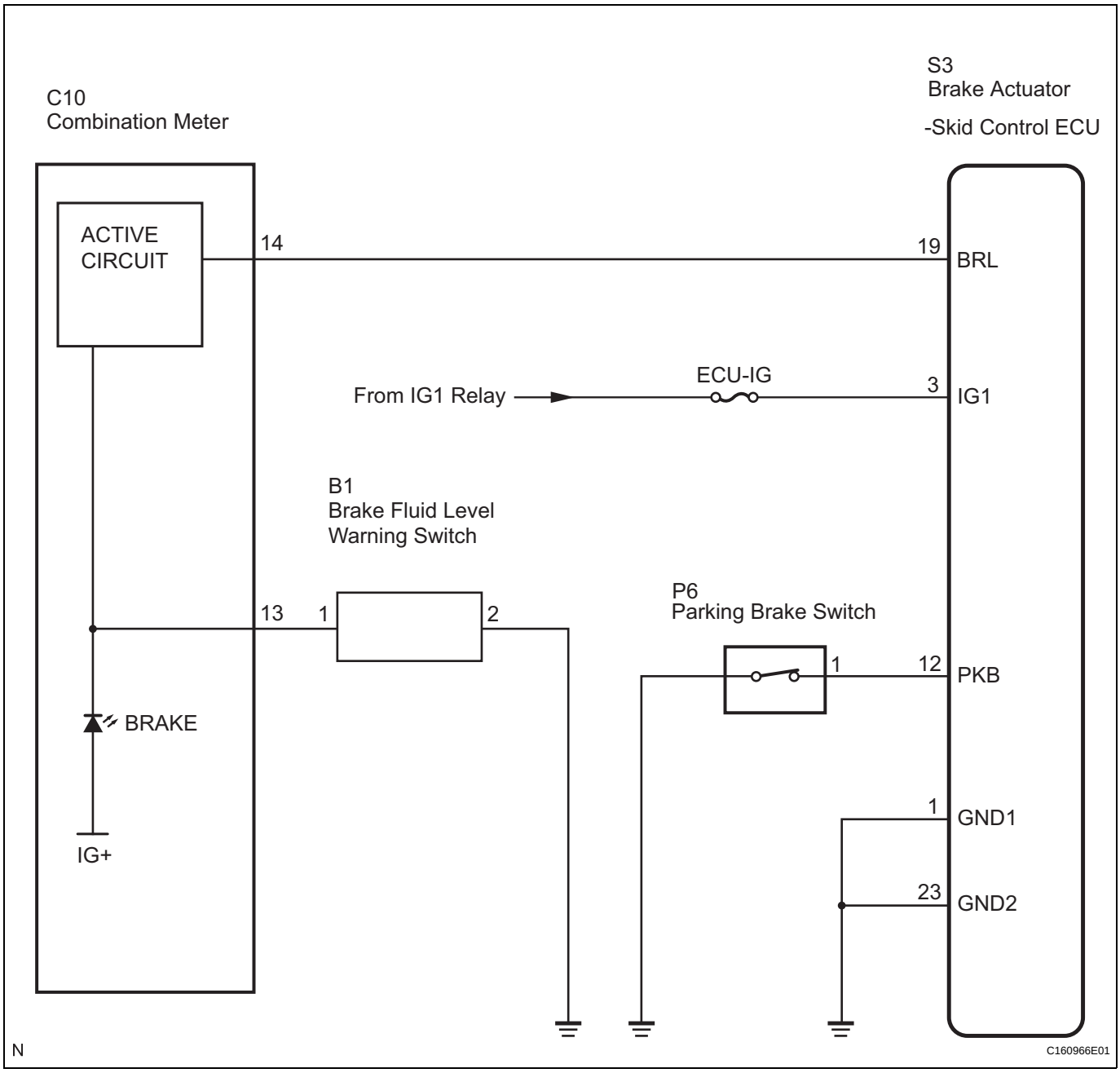

INSPECTION PROCEDURE

1	CHECK DTC

(a) Check if the ABS DTC is output (See page BC-10).

Result

Condition	Proceed to
DTC is not output	A
DTC is output	B

B → **REPAIR CIRCUITS INDICATED BY OUTPUT DTCS**

A

2	INSPECT SKID CONTROL ECU CONNECTOR SECURELY CONNECTED

(a) Check the skid control ECU connector's connecting condition.
OK:
The connector should be securely connected.

NG → **CONNECT CONNECTOR TO ECU CORRECTLY**

OK

3	INSPECT BATTERY

(a) Check the battery voltage.
Standard voltage:
10 to 14 V

NG → **INSPECT CHARGING SYSTEM**

OK

4	INSPECT SKID CONTROL ECU (IG1 TERMINAL VOLTAGE)

(a) Disconnect the skid control ECU connector.
(b) Turn the ignition switch to the on position.

Skid Control ECU (Harness Side Connector Front View):

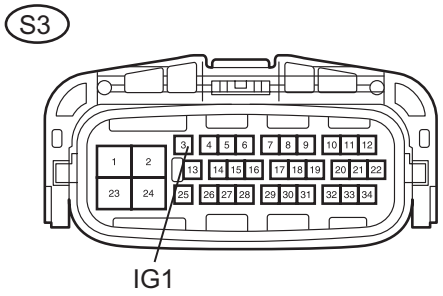

(c) Measure the voltage according to the value(s) in the table below.

Standard voltage

Tester Connection	Condition	Specified Condition
S3-3 (IG1) - Body ground	Ignition switch ON (IG)	10 to 14 V

NG → **REPAIR OR REPLACE HARNESS OR CONNECTOR (IG1 CIRCUIT)**

OK

5 INSPECT SKID CONTROL ECU (GND TERMINAL CONTINUITY)

Skid Control ECU (Wire Harness Side) Connector Front View:

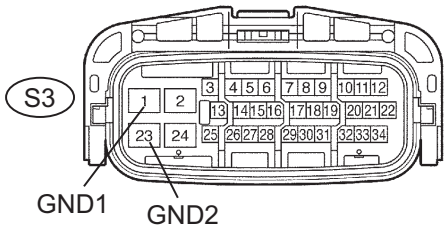

(a) Disconnect the skid control ECU connector.
(b) Measure the resistance according to the value(s) in the table below.

Standard resistance

Tester Connection	Specified Condition
S3-1 (GND1) - Body ground	Below 1 Ω
S3-23 (GND2) - Body ground	Below 1 Ω

NG → **REPAIR OR REPLACE HARNESS OR CONNECTOR (GND CIRCUIT)**

OK

6 INSPECT PARKING BRAKE SWITCH

Parking Brake Switch:

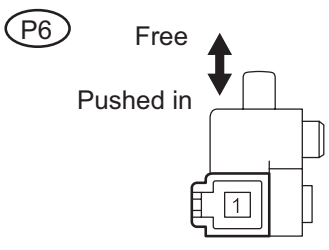

(a) Disconnect the parking brake switch connector.
(b) Measure the resistance according to the value(s) in the table below.

Standard resistance

Tester Connection	Condition	Specified Condition
P6-1 - Body ground	Parking brake switch ON (Switch pin free)	Below 1 Ω
P6-1 - Body ground	Parking brake switch OFF (Switch pin pushed in)	10 kΩ or higher

NG → **REPLACE PARKING BRAKE SWITCH**

OK

7 CHECK HARNESS AND CONNECTOR

(a) Disconnect the skid control ECU connector and parking brake switch.
(b) Measure the resistance according to the value(s) in the table below.

Standard resistance

Tester Connection	Specified Condition
S3-12 (PKB) - P6-1	Below 1 Ω
S3-12 (PKB) - Body ground	10 kΩ or higher

Skid Control ECU (Harness Side Connector Front View):

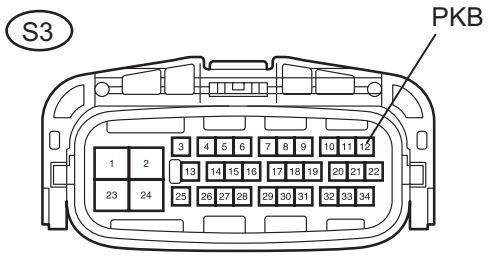

Parking Brake Switch (Harness Side Connector Front View):

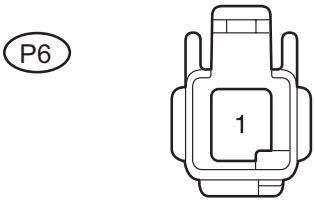

N C122972E04

NG → **REPAIR OR REPLACE HARNESS OR CONNECTOR (PKB CIRCUIT)**

OK

8 INSPECT BRAKE FLUID LEVEL WARNING SWITCH

(a) Remove the reservoir tank cap and strainer.
(b) Disconnect the brake fluid level warning switch connector.

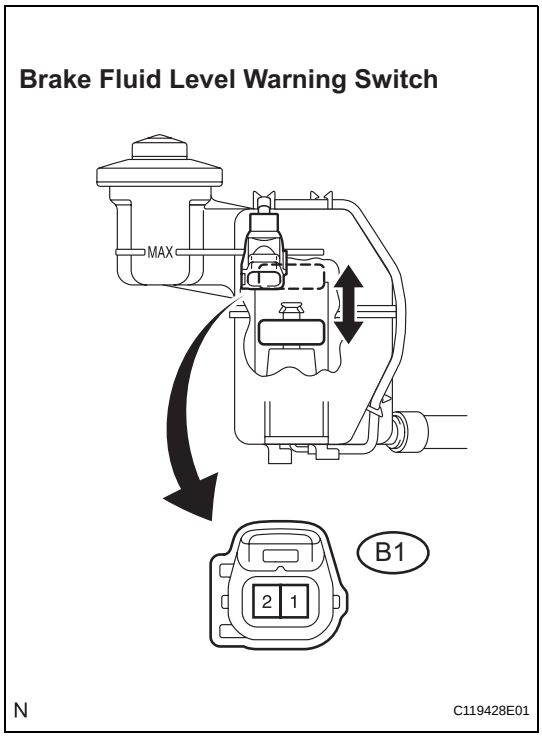

(c) Measure the resistance according to the value(s) in the table below.
HINT:
A float is placed inside the reservoir. Its position can be changed by increasing/decreasing the level of brake fluid.

Standard resistance

Tester Connection	Condition	Specified Condition
B1-1 - B1-2	Float up (Switch OFF)	1.9 to 2.1 kΩ
B1-1 - B1-2	Float down (Switch ON)	Below 1 Ω

HINT:
If there is no problem after finishing the above check, adjust the brake fluid level to the MAX level.

NG → **REPLACE BRAKE MASTER CYLINDER RESERVOIR SUB-ASSEMBLY**

OK

9	INSPECT HARNESS AND CONNECTOR (BETWEEN BRAKE FLUID LEVEL WARNING SW AND COMBINATION METER)

(a) Disconnect the combination meter connector.

Combination Meter (Wire Harness Side) Connector View

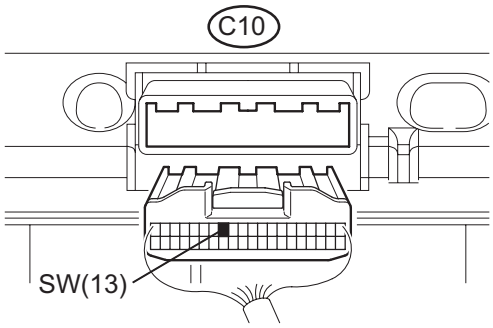

Brake Fluid Level Warning Switch Harness Side Connector Front View:

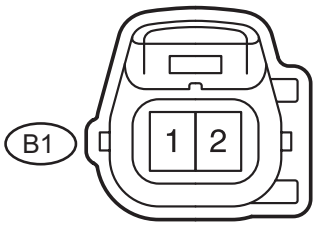

P C119429E03

(b) Measure the resistance according to the value(s) in the table below.

Standard resistance

Tester Connection	Specified Condition
C10-13 - B1-1	Below 1 Ω
C10-13 - Body ground	10 kΩ or higher
B1-2 - Body ground	Below 1 Ω

NG → **REPAIR OR REPLACE HARNESS OR CONNECTOR (BRAKE FLUID LEVEL WARNING SWITCH CIRCUIT)**

OK

10	CHECK HARNESS AND CONNECTOR (BETWEEN SKID CONTROL ECU AND COMBINATION METER ASSEMBLY)

(a) Turn the ignition switch off.
(b) Disconnect the combination meter connector.

Skid Control ECU (Wire Harness Side) Connector Front View:

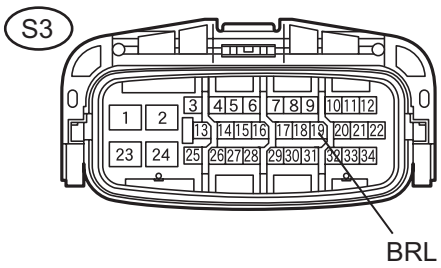

Combination Meter Assembly Wire Harness View:

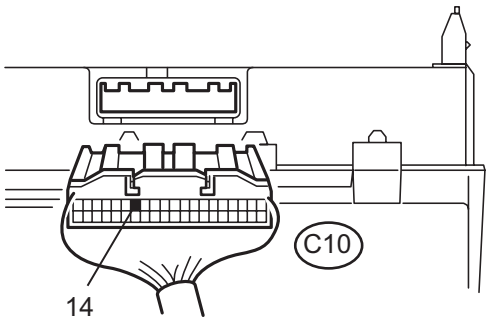

C

C111162E06

(c) Measure the resistance according to the value(s) in the table below.

Standard resistance

Tester Connection	Specified Condition
S3-19 (BRL) - C10-14	Below 1 Ω
S3-19 (BRL) - Body ground	10 kΩ or higher

NG → **REPAIR OR REPLACE HARNESS OR CONNECTOR**

OK

11 INSPECT COMBINATION METER ASSEMBLY

(a) Check the combination meter assembly (See page ME-4).

HINT:
If troubleshooting has been carried out according to the PROBLEM SYMPTOMS TABLE, refer back to the table and proceed to the next step before replacing the part (See page BC-7).

NG → **REPLACE COMBINATION METER ASSEMBLY**

OK

REPLACE BRAKE ACTUATOR ASSEMBLY