TS and CG Terminal Circuit

DESCRIPTION

The Test Mode (signal check) circuit detects trouble in the sensor or switch signal, which cannot be detected by the DTC check.
Connecting terminals TS and CG of the DLC3 starts the check.

WIRING DIAGRAM

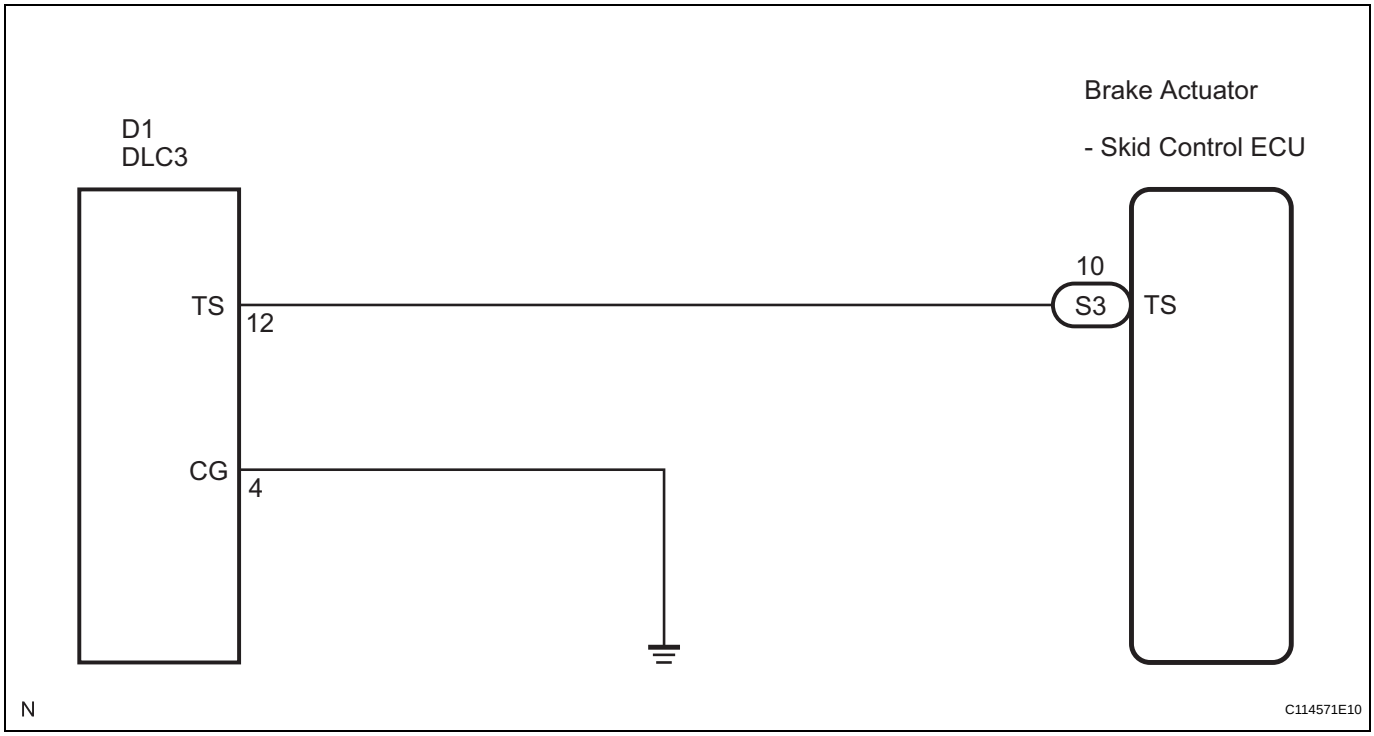

INSPECTION PROCEDURE

1 CHECK HARNESS AND CONNECTOR (BETWEEN SKID CONTROL ECU AND TS of DLC3)

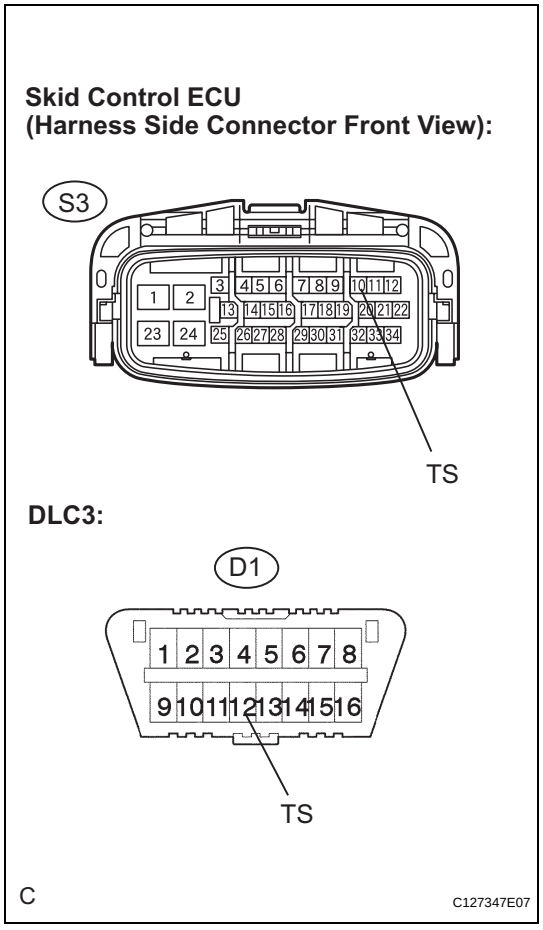

(a) Turn the ignition switch off.
(b) Disconnect the skid control ECU connector.
(c) Measure the resistance according to the value(s) in the table below.

Standard resistance

Tester Connection	Specified Condition
S3-10 (TS) - D1-12 (TS)	Below 1 Ω

NG → **REPAIR OR REPLACE HARNESS OR CONNECTOR**

OK

2 CHECK HARNESS AND CONNECTOR (BETWEEN CG of DLC3 AND BODY GROUND)

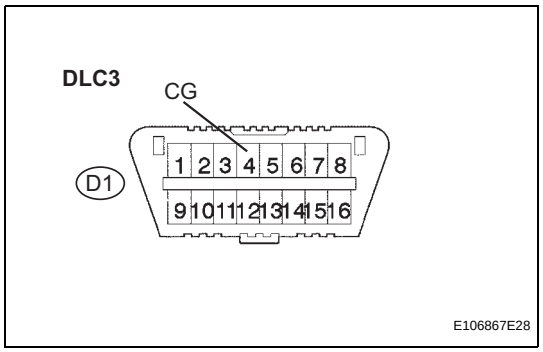

(a) Measure the resistance according to the value(s) in the table below.

Standard resistance

Tester Connection	Specified Condition
D1-4 (CG) - Body ground	Below 1 Ω

NG → **REPAIR OR REPLACE HARNESS OR CONNECTOR**

OK

BC

3	CHECK HARNESS AND CONNECTOR (BETWEEN TS of DLC3 AND BODY GROUND)

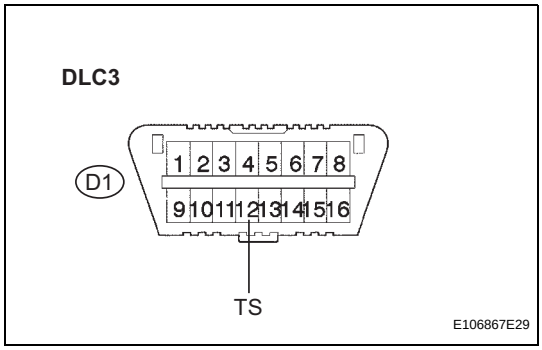

(a) Measure the resistance according to the value(s) in the table below.

Standard resistance

Tester Connection	Specified Condition
D1-12 (TS) - Body ground	10 kΩ or higher

NG → **REPAIR OR REPLACE HARNESS OR CONNECTOR**

OK

REPLACE BRAKE ACTUATOR ASSEMBLY