DTC	C0273/13	Open or Short Circuit in ABS Motor Relay Circuit

DTC	C0274/14	Short to B+ in ABS Motor Relay Circuit

DTC	C1361/91	Short Circuit in ABS Motor Fail Safe Relay Circuit

DESCRIPTION

The ABS motor relay supplies power to the ABS pump motor. While the ABS & TRAC & VSC are activated, the ECU switches the ABS motor relay ON and operates the ABS pump motor.

DTC Code	DTC Detection Condition	Trouble Area
C0273/13	When either of the following is detected: 1. All of the following conditions continue for 0.12 sec. or more. – The IG1 terminal voltage is between 9.5 and 18.5 V. – During initial check and ABS, BA, TRAC, or VSC are operating. – Relay contact is open when the relay is ON. 2. Both of the following conditions continue for 0.12 sec. – The IG1 terminal voltage is 9.5 V or less. – Relay contact remains open when the relay is ON.	• ABS 1 fuse • VSC MTR relay • VSC MTR relay circuit
C0274/14	When pump motor relay is turned off, relay contact is "ON" for 4 sec. or more.	• ABS 1 fuse • VSC MTR relay • VSC MTR relay circuit
C1361/91	Immediately after IG1 terminal is turned ON, when pump motor fail safe relay is tuned OFF, the relay contact is "ON" for 4 sec. or more.	• ABS 1 fuse • VSC FAIL relay • VSC FAIL relay circuit

WIRING DIAGRAM

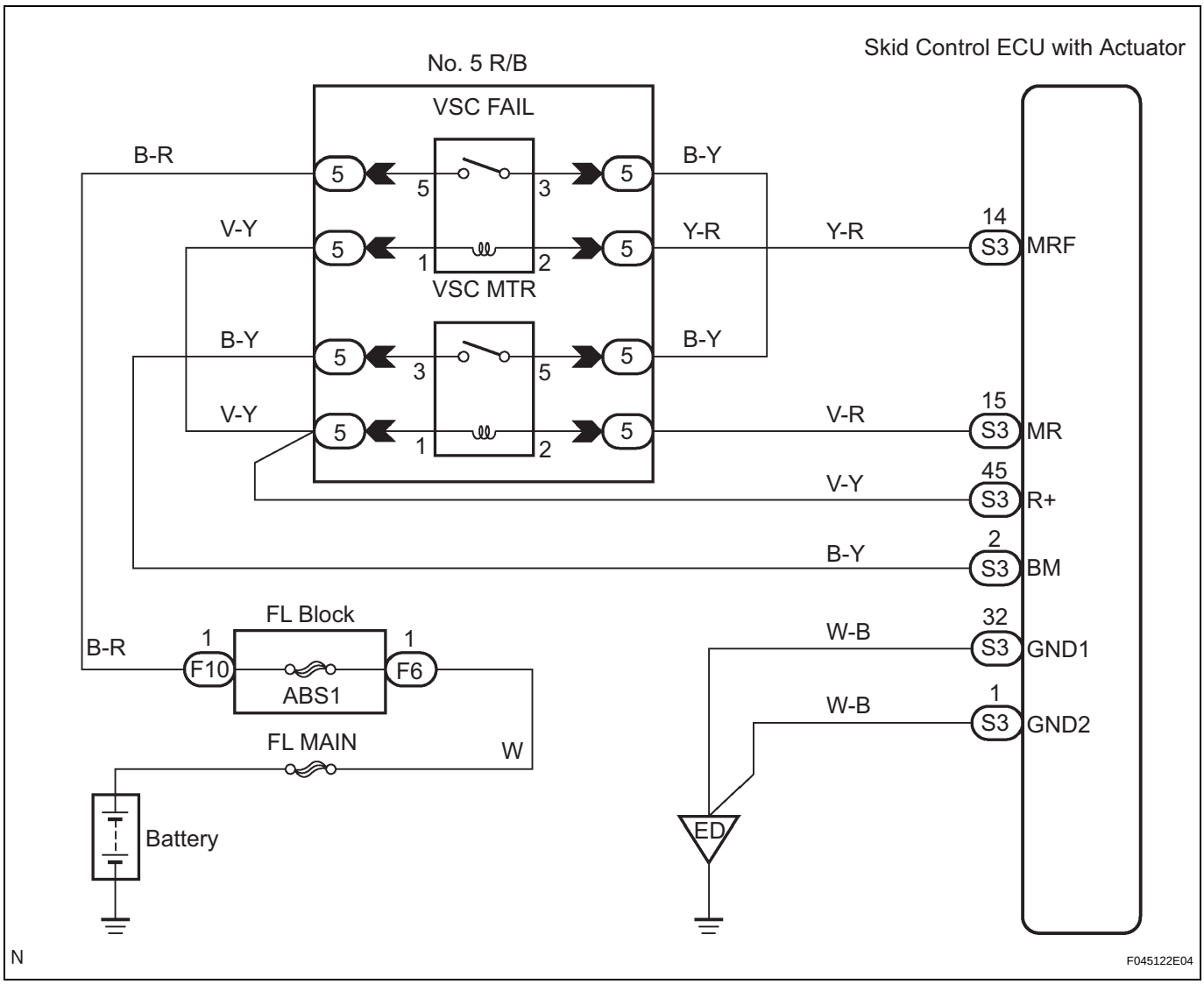

INSPECTION PROCEDURE

1	PERFORM ACTIVE TEST USING INTELLIGENT TESTER (ABS MOTOR RELAY)

(a) Connect the intelligent tester to the DLC3.
(b) Start the engine.
(c) Select the ACTIVE TEST mode on the intelligent tester.

ABS / VSC:

Tester Display	Test Part	Control Range	Diagnostic Note
ABS MOT RELAY	ABS motor relay	Relay ON / OFF	Operation of motor (clicking sound) can be heard

(d) Check the operation sound of the ABS motor individually when operating it with the intelligent tester.
OK:
Operation sound of the ABS motor should be heard.

NG	Go to step 2

BC

OK

REPLACE BRAKE ACTUATOR ASSEMBLY

2 INSPECT NO. 5 RELAY BLOCK (POWER SOURCE TERMINAL)

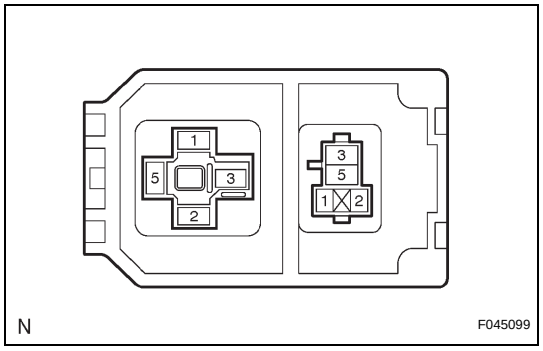

(a) Remove the VSC MTR relay from the No. 5 R/B.
(b) Turn the ignition switch to the ON position.
(c) Measure the voltage according to the value(s) in the table below.

Standard voltage

Tester Connection	Specified Condition
VSC MTR relay terminal 5 - Body ground	10 to 14 V

NG → **Go to step 6**

OK

3 INSPECT ABS MOTOR RELAY (VSC MTR)

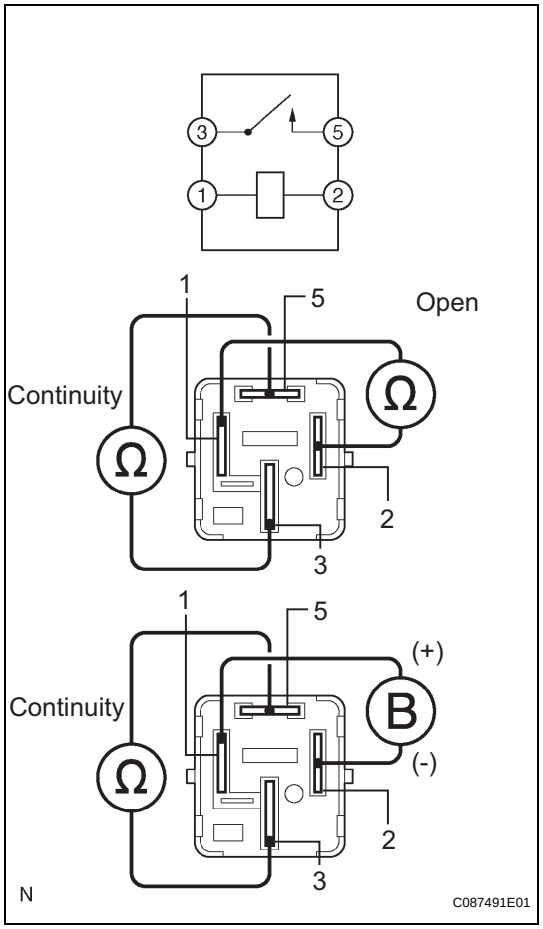

(a) Measure the resistance according to the value(s) in the table below.

Standard resistance

Tester Connection	Specified Condition
1 - 2	10 kΩ or higher
3 - 5	10 kΩ or higher

(b) Apply battery positive voltage between terminals 1 and 2.
(c) Measure the resistance according to the value(s) in the table below.

Standard resistance

Tester Connection	Specified Condition
3 - 5	Below 1 Ω

NG → **REPLACE ABS MOTOR RELAY (VSC MTR)**

BC

OK

4	CHECK HARNESS AND CONNECTOR (ABS MOTOR RELAY - SKID CONTROL ECU)

(a) Check for open or short circuit in harness and connector between the ABS motor relay and skid control ECU.

NG → **REPAIR OR REPLACE HARNESS OR CONNECTOR**

OK

5	RECONFIRM DTC

(a) Clear the DTCs.
(b) Drive the vehicle at a speed of 6 km/h (4 mph) or more.
(c) Check if the same DTCs are recorded (See page BC-82).

Result

Result	Proceed to
DTC is output	A
DTC is not output	B

HINT:
- The skid control ECU inspects the motor relay circuit when the stop light switch is turned off and the vehicle is running at a speed of 6 km/h (4mph) or more.
- It is suspect that the DTCs output was caused by the poor connection of the connector terminal.

B → **PROCEED TO NEXT CIRCUIT INSPECTION SHOWN IN PROBLEM SYMPTOMS TABLE**

A

REPLACE BRAKE ACTUATOR ASSEMBLY

6	INSPECT ABS 1 FUSE

(a) Remove the ABS 1 fuse from the FL block.
(b) Measure the resistance according to the value(s) in the table below.

Standard resistance

Tester Connection	Specified Condition
ABS 1 fuse	Below 1 Ω

NG → **REPLACE ABS 1 FUSE**

OK

BC

7	**INSPECT ABS MOTOR RELAY (VSC FAIL)**

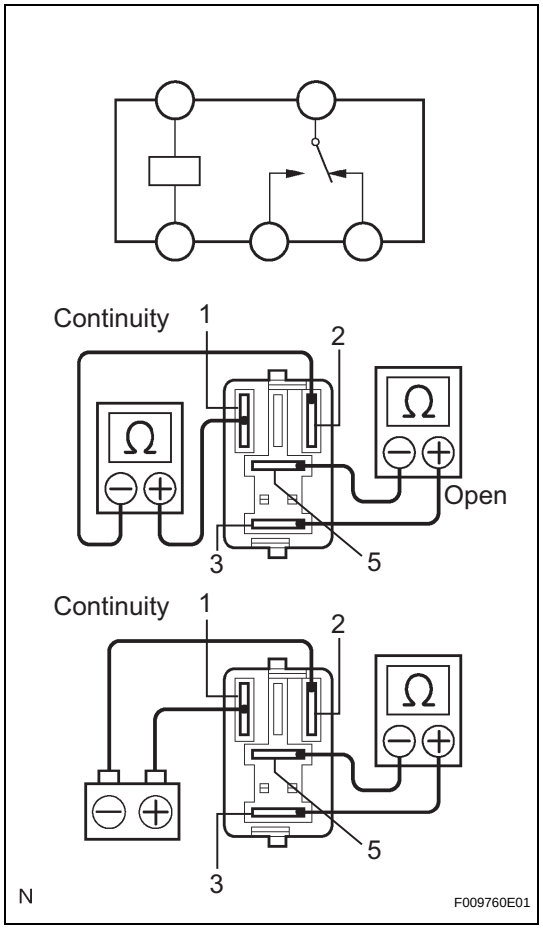

(a) Measure the resistance according to the value(s) in the table below.

Standard resistance

Tester Connection	Specified Condition
1 - 2	10 kΩ or higher
3 - 5	10 kΩ or higher

(b) Apply battery positive voltage between terminals 1 and 2.

(c) Measure the resistance according to the value(s) in the table below.

Standard resistance

Tester Connection	Specified Condition
3 - 5	Below 1 Ω

NG → **REPLACE ABS MOTOR RELAY (VSC FAIL)**

OK

REPAIR OR REPLACE HARNESS OR CONNECTOR