DTC	C0278/11	Open or Short Circuit in ABS Solenoid Relay Circuit

DTC	C0279/12	Short to B+ in ABS Solenoid Relay Circuit

DESCRIPTION

The ABS solenoid relay is built in the brake actuator assembly. This relay supplies power to each ABS solenoid. If the initial check is OK, after the ignition switch is turned to the ON position, the relay goes on.

DTC Code	DTC Detection Condition	Trouble Area
C0278/11	When either of the following is detected: 1. Both of the following conditions continue for 0.2 sec. or more. – The IG1 terminal voltage is between 9.5 and 18.5 V. – The solenoid relay contact is open when the relay is turned on. 2. Both of the following conditions continue for 0.2 sec. or more. – IG1 terminal voltage becomes lower than 9.5 V or less when the relay is turned on. – The relay contact remains open.	• ABS 2 fuse • ABS SOL relay • ABS SOL relay circuit • Brake actuator assembly
C0279/12	Immediately after IG1 is turned ON, when solenoid relay is turned OFF, relay contact is "ON" for 0.2 sec. or more.	• ABS 2 fuse • ABS SOL relay • ABS SOL relay circuit • Brake actuator assembly

WIRING DIAGRAM

Refer to DTCs C0226/21, C0236/22, C0246/23 and C0256/24 (See page BC-105).

INSPECTION PROCEDURE

1	INSPECT ABS 2 FUSE

(a) Remove the ABS 2 fuse from the FL block.
(b) Measure the resistance according to the value(s) in the table below.

Standard resistance

Tester Connection	Specified condition
ABS 2 fuse	Below 1 Ω

NG → REPLACE ABS 2 FUSE

OK

2	INSPECT SKID CONTROL ECU

(a) Disconnect the skid control ECU connector.
(b) Turn the ignition switch to the ON position.

BC

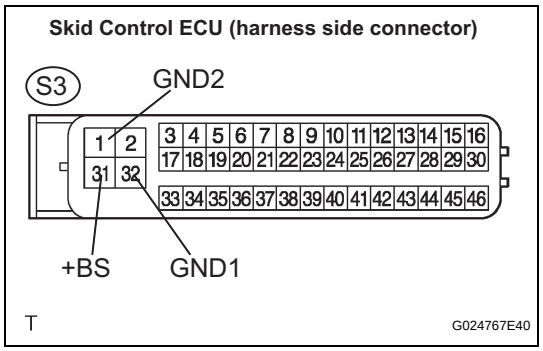

(c) Measure the voltage according to the value(s) in the table below.

Standard voltage

Tester Connection	Specified Condition
S3-31 (+BS) - S3-32 (GND1)	10 to 14 V
S3-31 (+BS) - S3-1 (GND2)	10 to 14 V

NG → **Go to step 4**

OK

3	RECONFIRM DTC

HINT:
This code is detected when a problem is determined in the brake actuator assembly.
The ABS solenoid relay is in the brake actuator assembly. Therefore, solenoid relay circuit inspection relay unit inspection cannot be performed. Be sure to check if the DTC code is output before replacing the brake actuator assembly.

(a) Clear the DTCs (See page BC-82).
(b) Turn the ignition switch to the ON position.
(c) Are the same DTCs recorded?

Result

Result	Proceed to
DTC is output	A
DTC is not output	B

NOTICE:
When replacing brake actuator assembly, perform zero point calibration (See page BC-70).

B → **PROCEED TO NEXT CIRCUIT INSPECTION SHOWN IN PROBLEM SYMPTOMS TABLE**

A

REPLACE BRAKE ACTUATOR ASSEMBLY

4	INSPECT SKID CONTROL ECU (GND TERMINAL)

(a) Disconnect the skid control ECU connector.

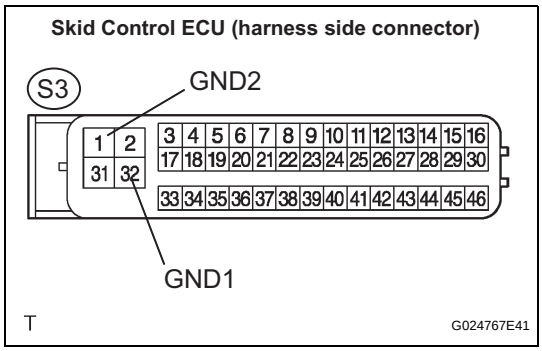

(b) Measure the resistance according to the value(s) in the table below.

Standard resistance

Tester Connection	Specified Condition
S3-32 (GND1) - Body ground	Below 1 Ω
S3-1 (GND2) - Body ground	Below 1 Ω

NG → **REPAIR OR REPLACE HARNESS OR CONNECTOR (GND CIRCUIT)**

OK

5 RECONFIRM DTC

HINT:
This code is detected when a problem is determined in the brake actuator assembly.
The ABS solenoid relay is in the brake actuator assembly. Therefore, solenoid relay circuit inspection relay unit inspection cannot be performed. Be sure to check if the DTC code is output before replacing the brake actuator assembly.

(a) Clear the DTCs (See page BC-82).
(b) Turn the ignition switch to the ON position.
(c) Are the same DTCs recorded?

Result

Result	Proceed to
DTC is output	A
DTC is not output	B

HINT:
It is suspected that the DTCs output was caused by the poor connection of the connector terminal.

NOTICE:
When replacing brake actuator assembly, perform zero point calibration (See page BC-70).

B → **PROCEED TO NEXT CIRCUIT INSPECTION SHOWN IN PROBLEM SYMPTOMS TABLE**

A

REPLACE BRAKE ACTUATOR ASSEMBLY