DTC	C1210/36	Zero Point Calibration of Yaw Rate Sensor Undone

DTC	C1336/39	Zero Point Calibration of Acceleration Sensor Undone

DESCRIPTION

The skid control ECU receives signals from the yaw rate sensor via CAN communication system.
Yaw rate sensor has the built-in deceleration sensor.
If there is trouble in the bus lines between the yaw rate and deceleration sensor and CAN communication system, the DTC U0123/62 (yaw rate sensor communication trouble) and U0124/95 (deceleration sensor communication trouble) are output.
The DTC is also output when the calibration has not been completed.

DTC Code	DTC Detection Condition	Trouble Area
C1210/36	Zero point calibration of yaw rate sensor undone.	• Yaw rate and deceleration sensor • Zero point calibration undone
C1336/39	When either of the following is detected: 1. The vehicle runs in the normal mode with zero point calibration undone. 2. After the zero point has been obtained, the zero point voltage of the sensor is not between 2.38 and 2.62 V.	• Yaw rate and deceleration sensor • Zero point calibration undone

WIRING DIAGRAM

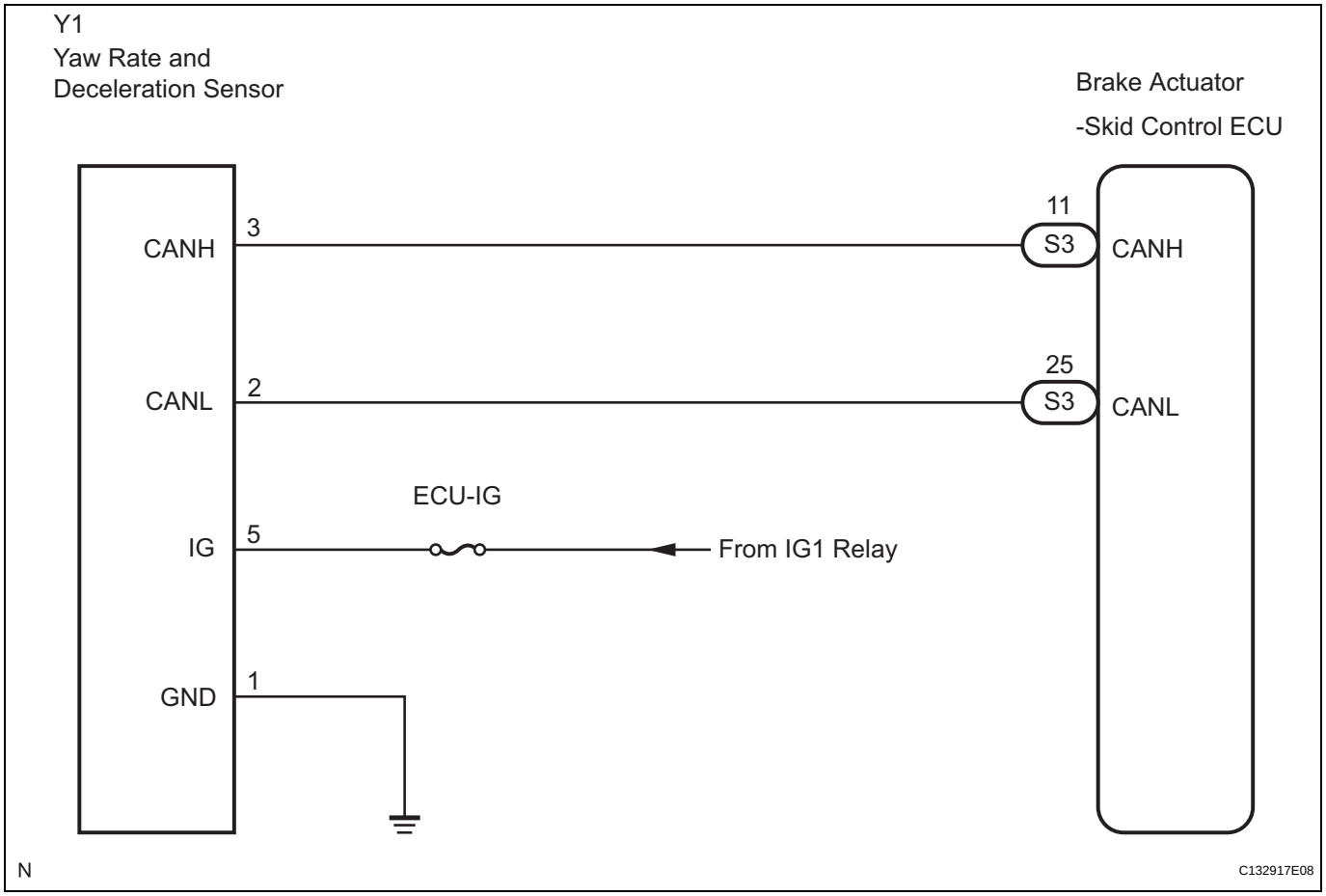

BC

INSPECTION PROCEDURE

HINT:
When U0073/94, U0100/65, U0123/62, U0124/95 or U0126/63 are output accompanied with C1210/36 or C1336/39, inspect and repair the trouble areas indicated by U0073/94, U0100/65, U0123/62, U0124/95 or U0126/63 first.

1 PERFORM ZERO POINT CALIBRATION OF YAW RATE AND DECELERATION SENSOR

(a) Perform the zero point calibration of the yaw rate and deceleration sensor (See page BC-70).

NEXT

2 RECONFIRM DTC

(a) Clear the DTCs (See page BC-82).
(b) Turn the ignition switch to the ON position.
(c) Are the same DTCs recorded (See page BC-82).

Result

Result	Proceed to
DTC is output	A
DTC is not output	B

B → **PROCEED TO NEXT CIRCUIT INSPECTION SHOWN IN PROBLEM SYMPTOMS TABLE**

A

3 CHECK YAW RATE AND DECELERATION SENSOR INSTALLATION

(a) Check that the yaw rate and deceleration sensor has been installed properly (See page BC-197).
NOTICE:
When replacing the yaw rate and deceleration sensor, perform zero point calibration (See page BC-70).

NG → **INSTALL YAW RATE AND DECELERATION SENSOR CORRECTLY**

OK

REPLACE YAW RATE AND DECELERATION SENSOR