DTC	C1241/41	Low Battery Positive Voltage

DESCRIPTION

DTC Code	DTC Detection Condition	Trouble Area
C1241/41	When any of the following is detected: 1. At a vehicle speed of 3 km/h (2mph) or more, the IG1 terminal voltage is 9.5 V or less for 10 sec. or more. 2. When the solenoid relay remains ON and the IG1 terminal voltage is 9.5 V or less, the relay contact is open for 0.2 sec. or more. 3. While the motor fail safe relay is ON after motor relay ON, the IG1 terminal voltage is 9.5 V or less and the actuator pump drive motor is OFF for 0.1 sec. or more.	• Battery • Charging system • Power source circuit

WIRING DIAGRAM

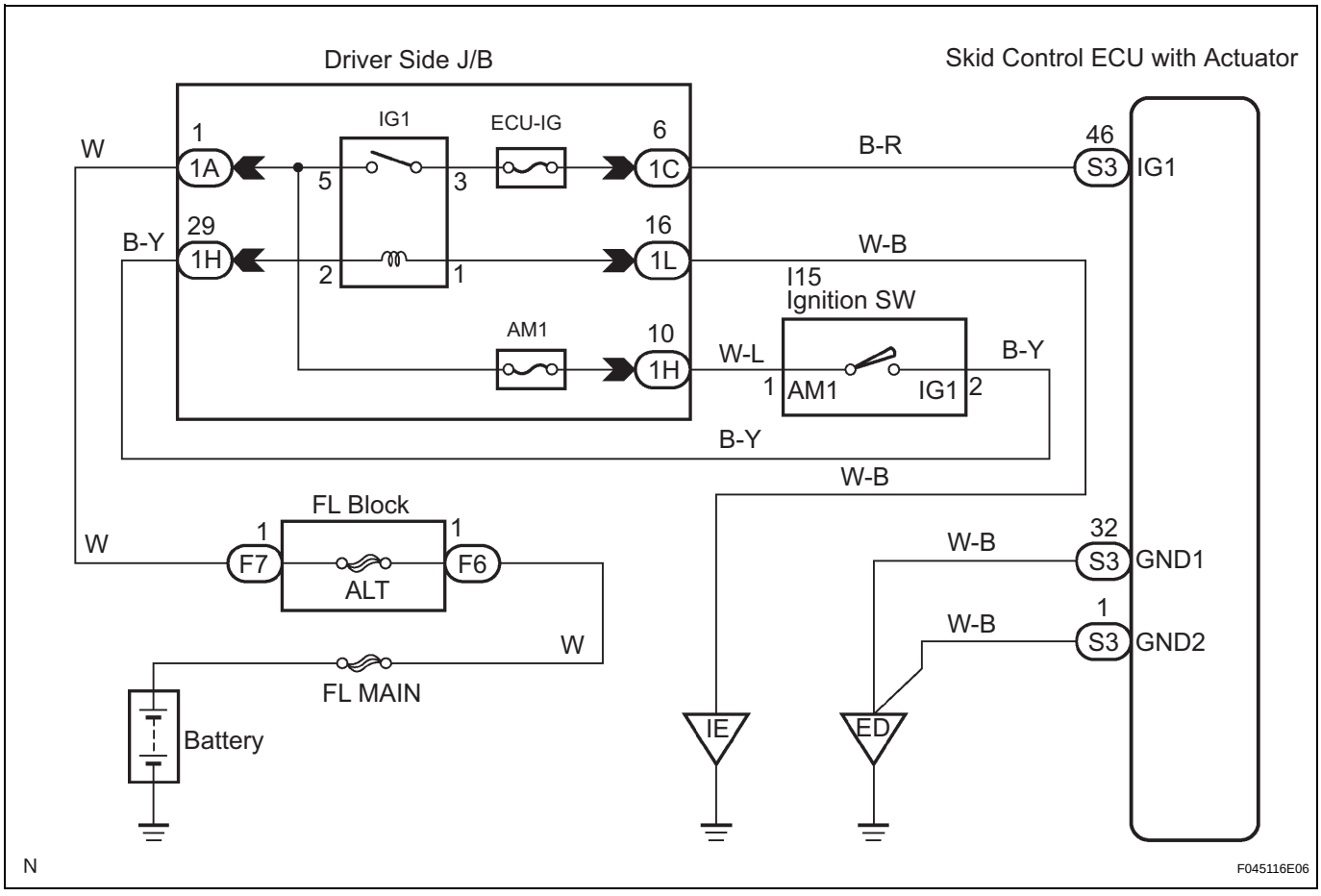

INSPECTION PROCEDURE

BC

1	INSPECT ECU-IG FUSE

(a) Remove the ECU-IG fuse from the driver side J/B.

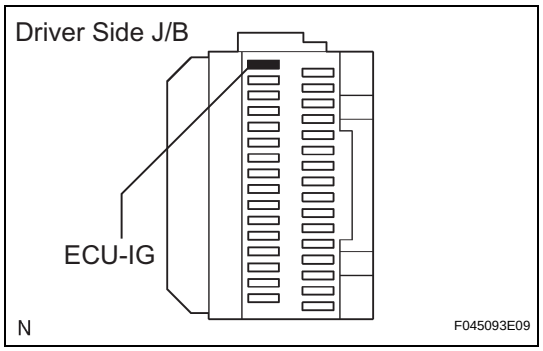

(b) Check continuity of the ECU-IG fuse.
Standard resistance

Tester Connection	Specified condition
ECU-IG Fuse	Below 1 Ω

NG → **REPLACE ECU-IG FUSE**

OK

2 CHECK BATTERY

(a) Check the positive battery voltage.
Standard voltage:
11 to 14 V

NG → **CHECK OR REPLACE CHARGING SYSTEM OR BATTERY**

OK

3 INSPECT SKID CONTROL ECU (IG1 TERMINAL)

(a) WHEN USING INTELLIGENT TESTER:
(1) Connect the intelligent tester to the DLC3.
(2) Start the engine.
(3) Select the DATA LIST mode on the intelligent tester.

ABS / VSC:

Tester Display	Measurement Item/Range	Normal Condition
IG VOLTAGE	ECU power supply voltage / UNDER / NORMAL	NORMAL: 9.5 V or over UNDER: Below 9.5 V

(4) Check that the voltage condition output from the ECU displayed on the intelligent tester.
OK:
"Normal" is displayed.

(b) WHEN NOT USING INTELLIGENT TESTER:
(1) Disconnect the skid control ECU connector.
(2) Turn the ignition switch to the ON position.
(3) Measure the voltage according to the value(s) in the table below.
Standard voltage

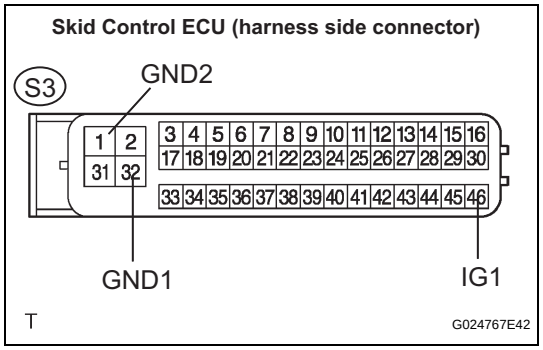

Tester Connection	Specified Condition
S3-46 (IG1) - S3-32 (GND1)	10 to 14 V
S3-46 (IG1) - S3-1 (GND2)	10 to 14 V

NOTICE:
When replacing the brake actuator assembly, perform zero point calibration (See page BC-70).

NG → **Go to step 4**

BC

OK

REPLACE BRAKE ACTUATOR ASSEMBLY

4 INSPECT SKID CONTROL ECU (GND TERMINAL)

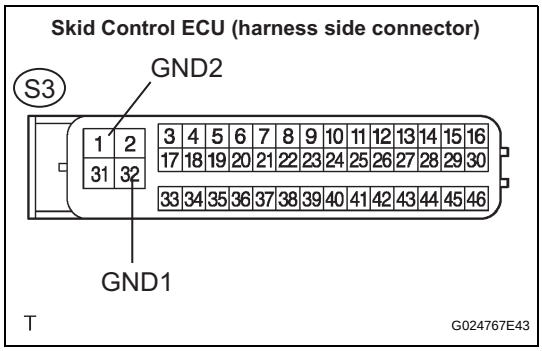

(a) Disconnect the skid control ECU connector.
(b) Measure the resistance according to the value(s) in the table below.

Standard resistance

Tester Connection	Specified Condition
S3-32 (GND1) - Body ground	Below 1 Ω
S3-1 (GND2) - Body ground	Below 1 Ω

NG → **REPAIR OR REPLACE HARNESS OR CONNECTOR (GND CIRCUIT)**

OK

REPAIR OR REPLACE HARNESS OR CONNECTOR (IG1 CIRCUIT)