DTC	C1249/49	Open in Stop Light Switch Circuit

DESCRIPTION

DTC Code	DTC Detection Condition	Trouble Area
C1249/49	When IG1 terminal voltage is 9.5 to 18.5 V, an open circuit of the stop light switch continues for 0.3 sec. or more.	• Stop light assembly • Stop light switch circuit

WIRING DIAGRAM

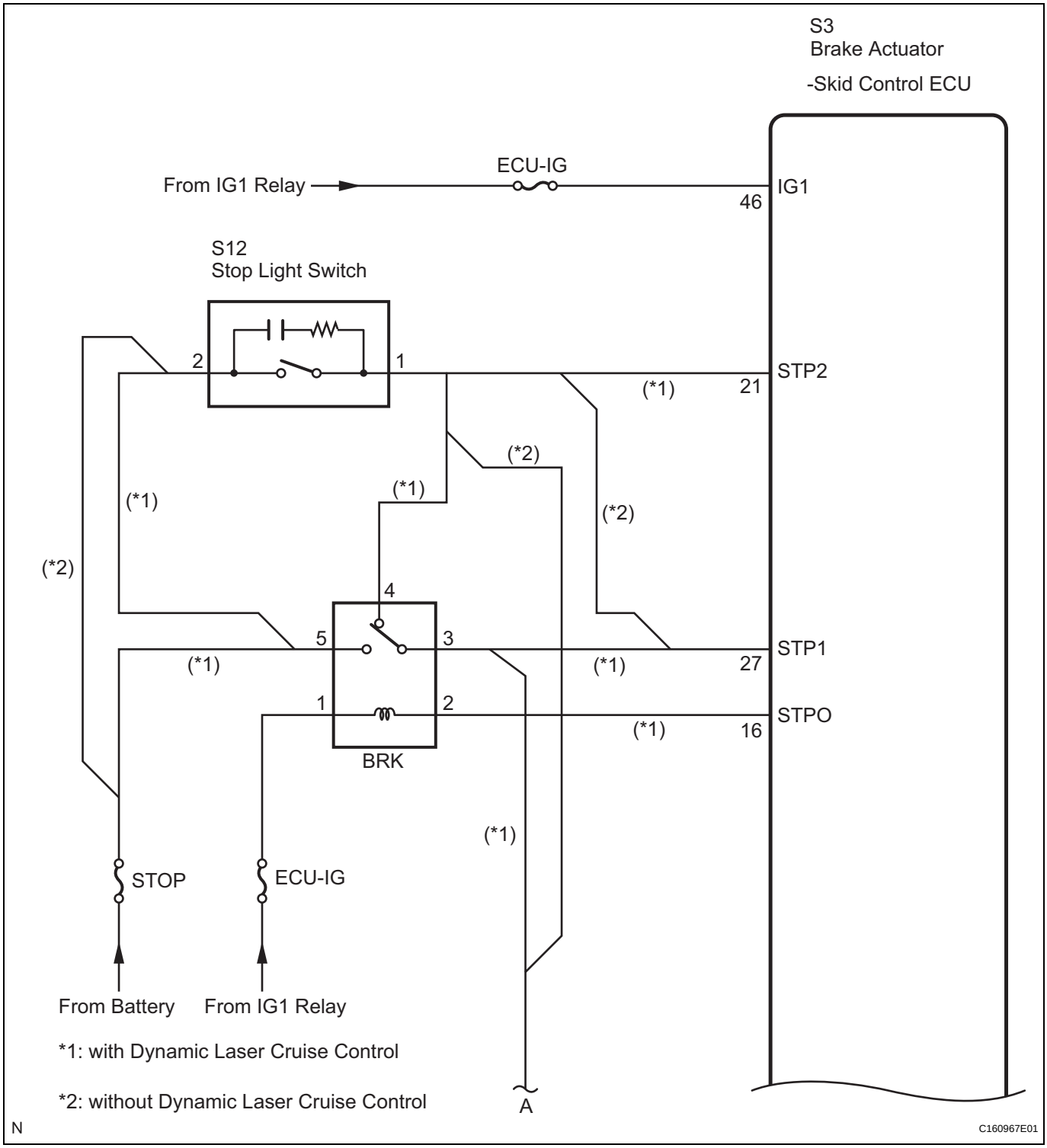

BC

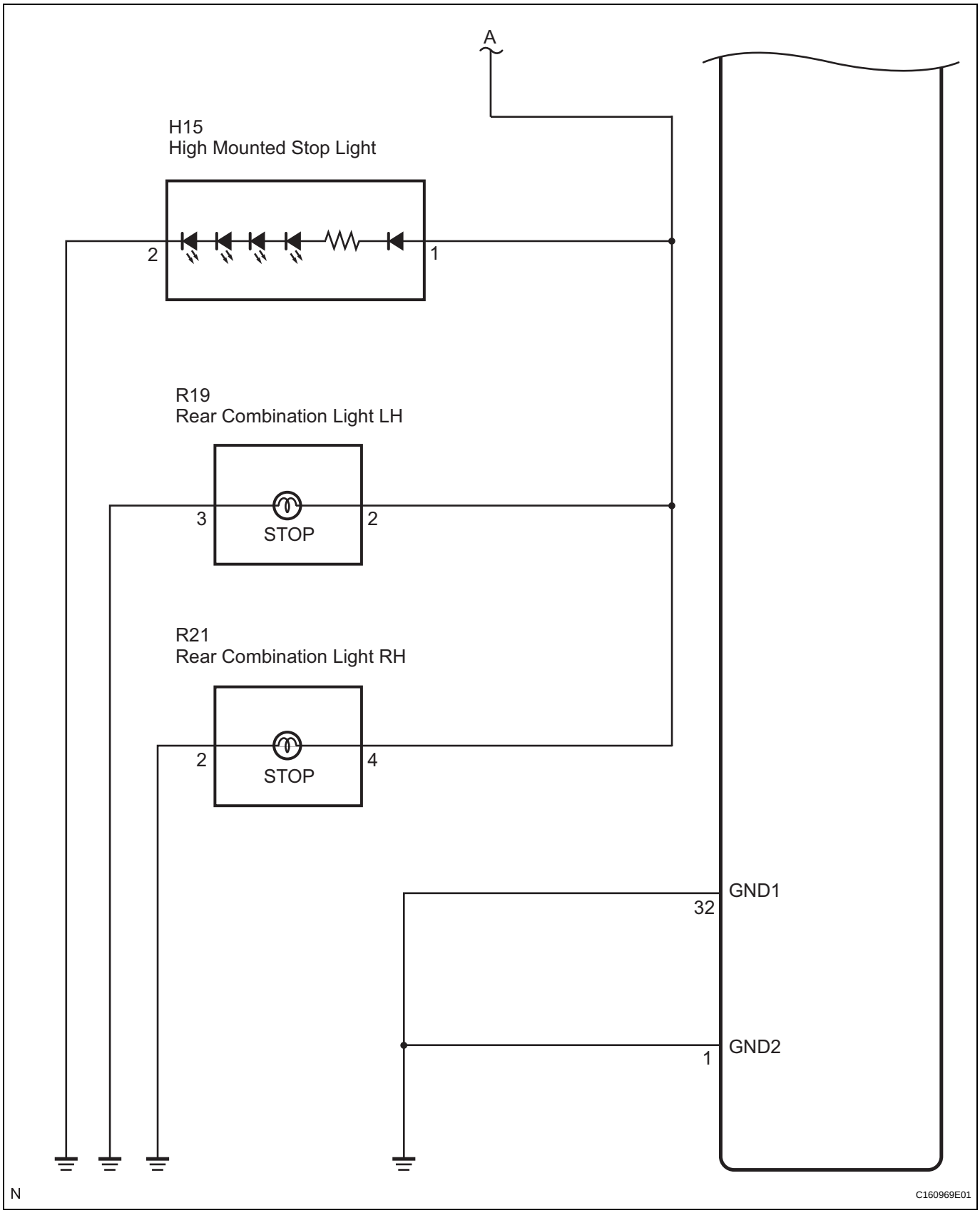
A
H15
High Mounted Stop Light
2
1
R19
Rear Combination Light LH
3
STOP
2
R21
Rear Combination Light RH
2
STOP
4
GND1
32
GND2
1
N
C160969E01

INSPECTION PROCEDURE

1 CHECK STOP LIGHT SWITCH OPERATION

(a) Check that the stop light comes on when the brake pedal is depressed and goes off when the brake pedal is released.

OK

Pedal Condition	Illumination Condition
Brake pedal depressed	ON
Brake pedal released	OFF

HINT:
Check the stop light bulb as it may have burnt out.

NG → **Go to step 4**

OK

2 INSPECT SKID CONTROL ECU (STP1 TERMINAL)

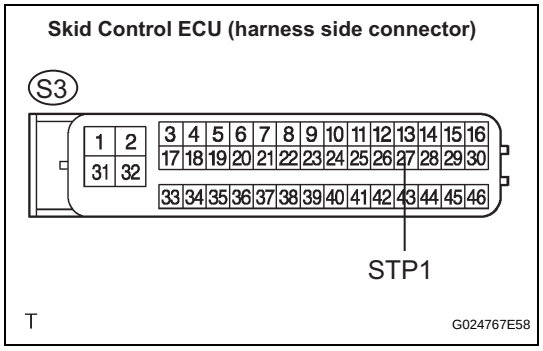

(a) Disconnect the skid control ECU connector.
(b) Measure the voltage according to the value(s) in the table below.

Standard voltage

Tester Connection	Condition	Specified Condition
S3-27 (STP1) - Body ground	Brake pedal depressed	8 to 14 V
S3-27 (STP1) - Body ground	Brake pedal released	Below 1 V

NG → **Go to step 5**

OK

3 RECONFIRM DTC

(a) Clear the DTCs (See page BC-82).
(b) Turn the ignition switch to the ON position.
(c) Are the same DTCs detected?

Result

Result	Proceed to
DTC is output	A
DTC is not output	B

NOTICE:
When replacing the brake actuator assembly, perform zero point calibration (See page BC-70).

B → **PROCEED TO NEXT CIRCUIT INSPECTION SHOWN IN PROBLEM SYMPTOMS TABLE**

BC

A

REPLACE BRAKE ACTUATOR ASSEMBLY

4 INSPECT STOP LIGHT SWITCH

Component without harness connected:
(Stop Light Switch)

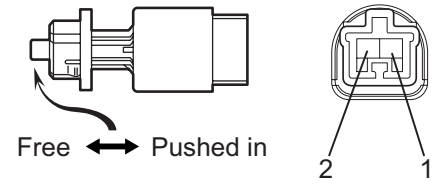

H

C146625E04

(a) Disconnect the stop light switch assembly connector.
(b) Measure the resistance according to the value(s) in the table below.

Standard resistance

Tester connection	Switch condition	Specified condition
1 - 2	Switch pin free	Below 1 Ω
1 - 2	Switch pin pushed in	10 kΩ or higher

NG → **REPLACE STOP LIGHT SWITCH**

OK

5 CHECK HARNESS AND CONNECTOR (STOP LIGHT SWITCH - SKID CONTROL ECU)

Skid Control ECU
(harness side connector)

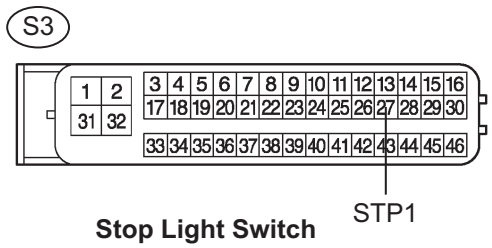

Stop Light Switch
(harness side connector)

T

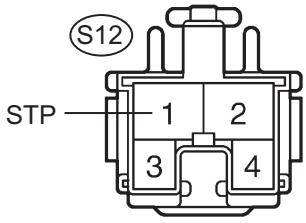

P

G026188E08

(a) Disconnect the stop light switch connector and skid control ECU connector.
(b) Measure the resistance according to the value(s) in the table below.

Standard resistance

Tester Connection	Specified Condition
S3-27 (STP1) - S12-1 (STP)	Below 1 Ω

NOTICE:
When replacing the brake actuator assembly, perform zero point calibration (See page BC-70).

NG → **REPAIR OR REPLACE HARNESS OR CONNECTOR**

BC

OK

REPLACE BRAKE ACTUATOR ASSEMBLY