DTC	C1251/51	Open in Pump Motor Circuit

DESCRIPTION

DTC Code	DTC Detection Condition	Trouble Area
C1251/51	When either of the following is detected: 1. Actuator pump motor does not operate properly. 2. Open in actuator pump motor circuit continues for at least 2 sec.	• Brake actuator assembly (Ground circuit) • Brake actuator assembly (Motor circuit)

WIRING DIAGRAM

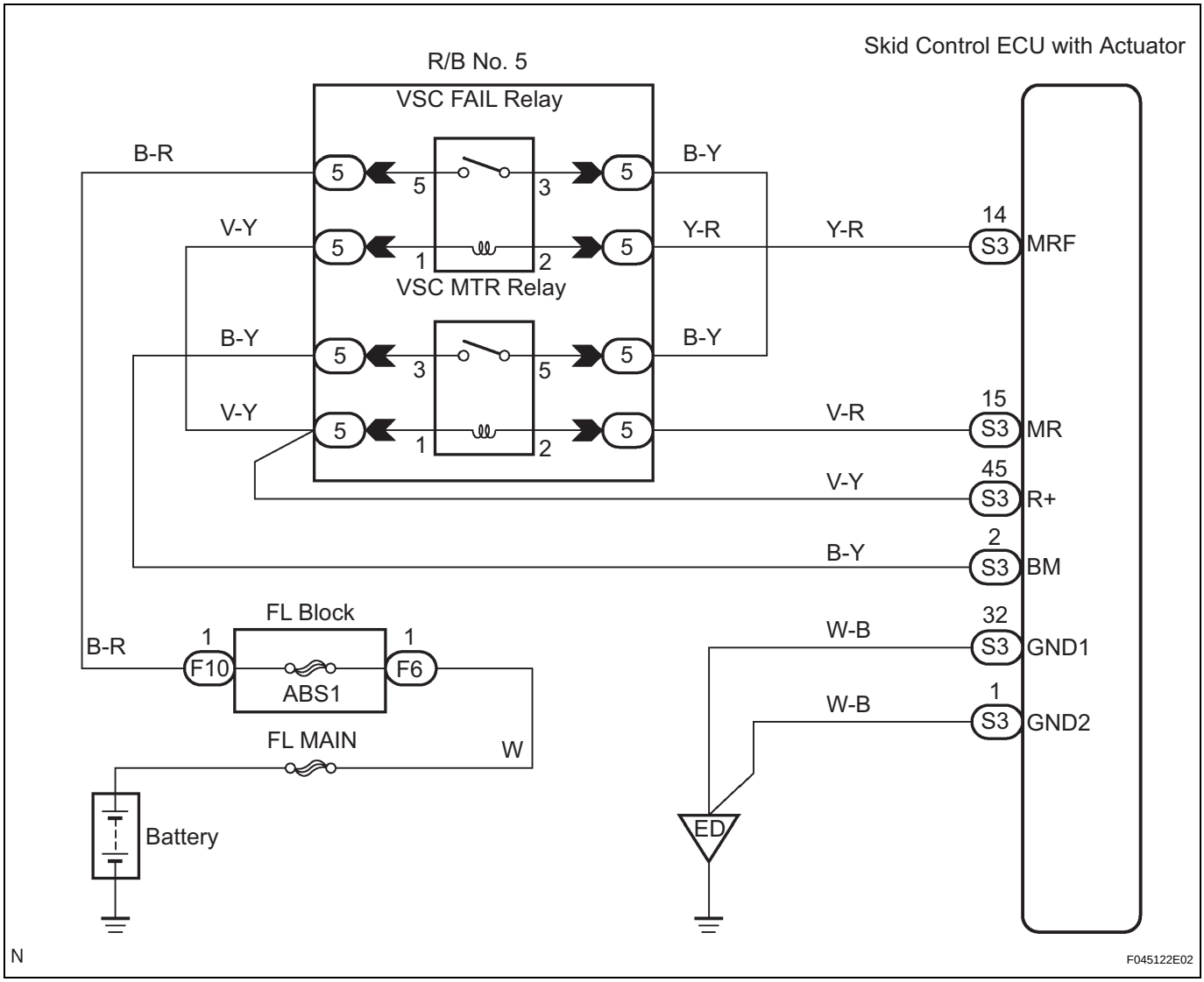

INSPECTION PROCEDURE

BC

1	PERFORM ACTIVE TEST USING INTELLIGENT TESTER (ABS MOTOR RELAY)

(a) Connect the intelligent tester to the DLC3.
(b) Start the engine.

(c) Select the ACTIVE TEST mode on the intelligent tester.

ABS / VSC:

Tester Display	Test Part	Control Range	Diagnostic Note
ABS MOT RELAY	ABS motor relay	Relay ON / OFF	Operation of motor (clicking sound) can be heard

(d) Check the operation sound of the ABS motor individually when operating it with the intelligent tester.

OK:

The operation sound of the ABS motor should be heard.

NOTICE:

When replacing the brake actuator assembly, perform zero point calibration (See page BC-70).

NG → **Go to step 2**

OK

REPLACE BRAKE ACTUATOR ASSEMBLY

2 INSPECT SKID CONTROL ECU (GND2 TERMINAL)

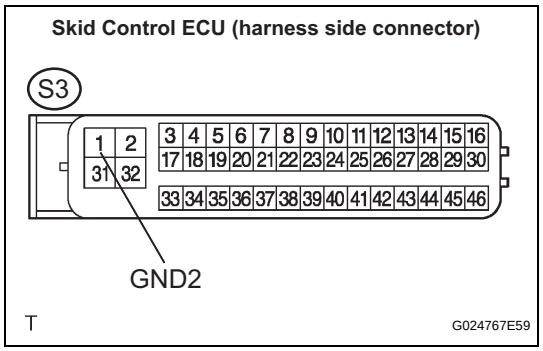

(a) Disconnect the skid control ECU connector.

(b) Measure the resistance according to the value(s) in the table below.

Standard resistance

Tester Connection	Specified Condition
S3-1 (GND2) - Body ground	Below 1 Ω

NOTICE:

When replacing the brake actuator assembly, perform zero point calibration (See page BC-70).

NG → **REPAIR OR REPLACE HARNESS OR CONNECTOR (GND2 CIRCUIT)**

OK

REPLACE BRAKE ACTUATOR ASSEMBLY