Skid Control Buzzer Circuit

DESCRIPTION

The skid control buzzer sounds and SLIP indicator blinking during VSC operation.

WIRING DIAGRAM

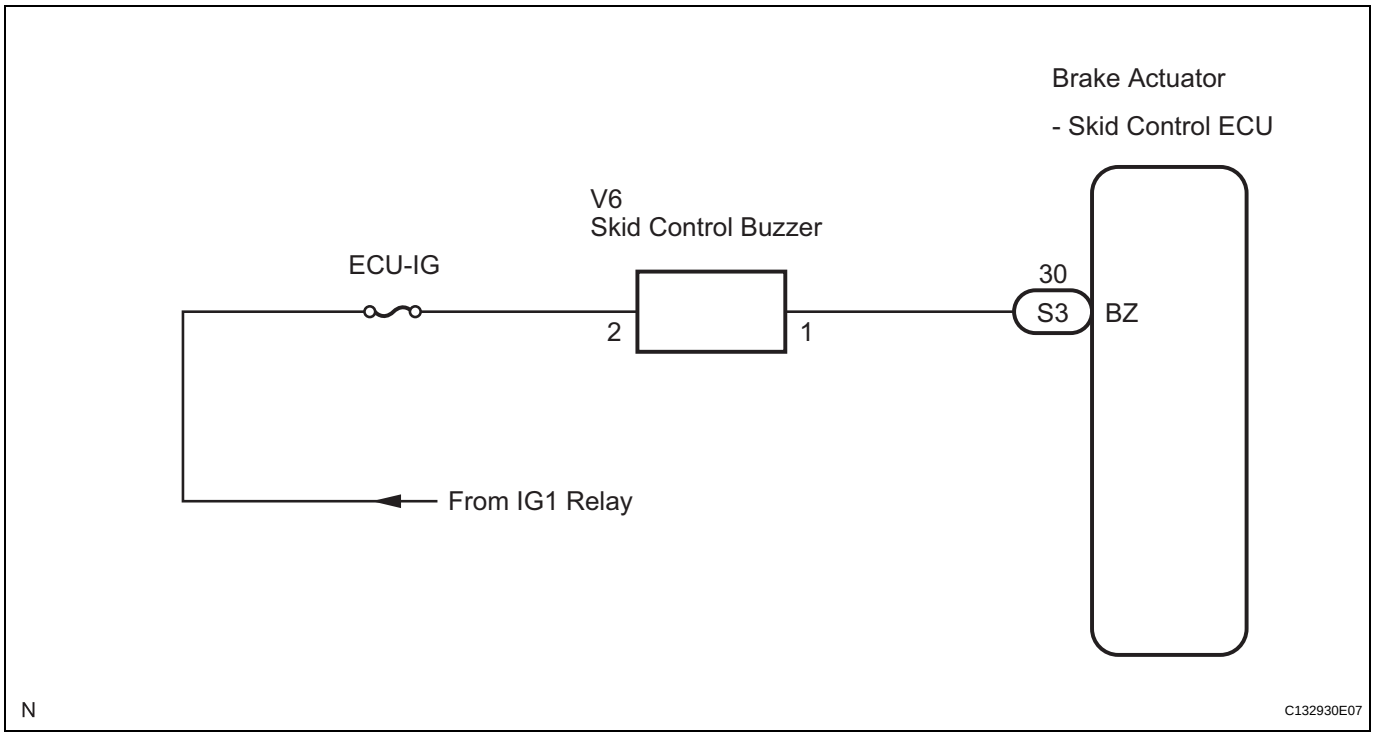

INSPECTION PROCEDURE

1	PERFORM ACTIVE TEST USING INTELLIGENT TESTER (SKID CONTROL BUZZER)

(a) Connect the intelligent tester to the DLC3.
(b) Start the engine.
(c) Select the item "VSC / BR WARN BUZ" in the ACTIVE TEST and operate the skid control buzzer on the intelligent tester.

ABS / VSC:

Tester Display	Test Part	Control Range	Diagnostic Note
VSC / BR WARN BUZ	Skid control buzzer	Buzzer ON / OFF	Buzzer can be heard

(d) Check that skid control buzzer sounds by operating with the intelligent tester.

OK:

The skid control buzzer sounds in accordance with operation of the intelligent tester.

BC

NG	Go to step 2

OK

REPLACE BRAKE ACTUATOR ASSEMBLY

2 INSPECT SKID CONTROL BUZZER

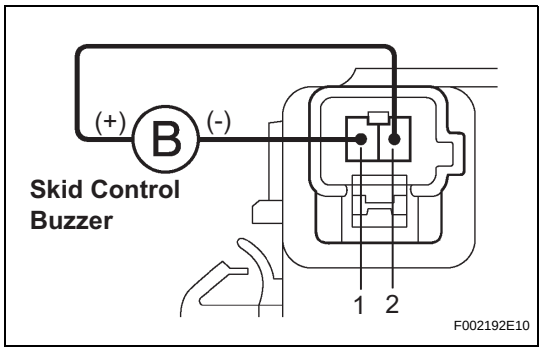

(a) Disconnect the skid control buzzer connector.
(b) Apply battery negative voltage to terminal 1, and battery positive voltage to terminal 2 of the skid control buzzer connector, and check that the buzzer sounds.
OK:
The skid control buzzer sound should be heard.

NG → **REPLACE SKID CONTROL BUZZER**

OK

3 CHECK HARNESS AND CONNECTOR (SKID CONTROL BUZZER - SKID CONTROL ECU)

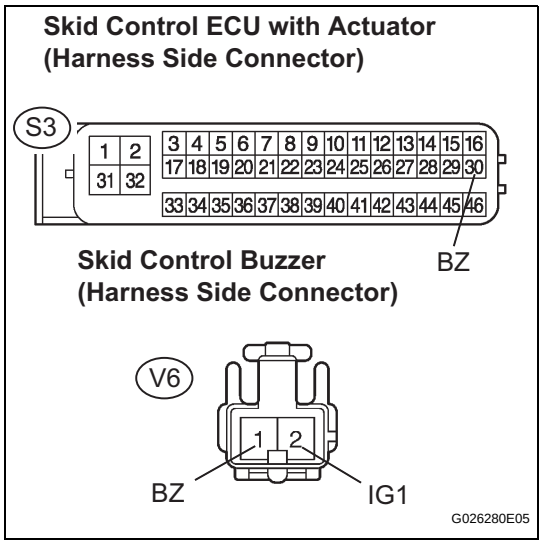

(a) Disconnect the skid control buzzer connector and the skid control ECU connector.
(b) Measure the resistance according to the value(s) in the table below.
Standard resistance

Tester Connection	Specified Condition
S3-30 (BZ) - V6-1 (BZ)	Below 1 Ω

(c) Measure the resistance according to the value(s) in the table below.
Standard resistance

Tester Connection	Specified Condition
S3-30 (BZ) - Body ground	10 kΩ or higher

NOTICE:
When replacing the brake actuator assembly, perform zero point calibration (See page BC-70)

NG → **REPAIR OR REPLACE HARNESS OR CONNECTOR**

OK

REPLACE BRAKE ACTUATOR ASSEMBLY

BC