TS and CG Terminal Circuit

DESCRIPTION

In the sensor check mode, a malfunction of the speed sensor that cannot be detected when the vehicle is stopped is detected while driving.
Transition to the sensor check mode can be performed by connecting terminals TS and CG of the DLC3 and turning the ignition switch from off to the ON position.

WIRING DIAGRAM

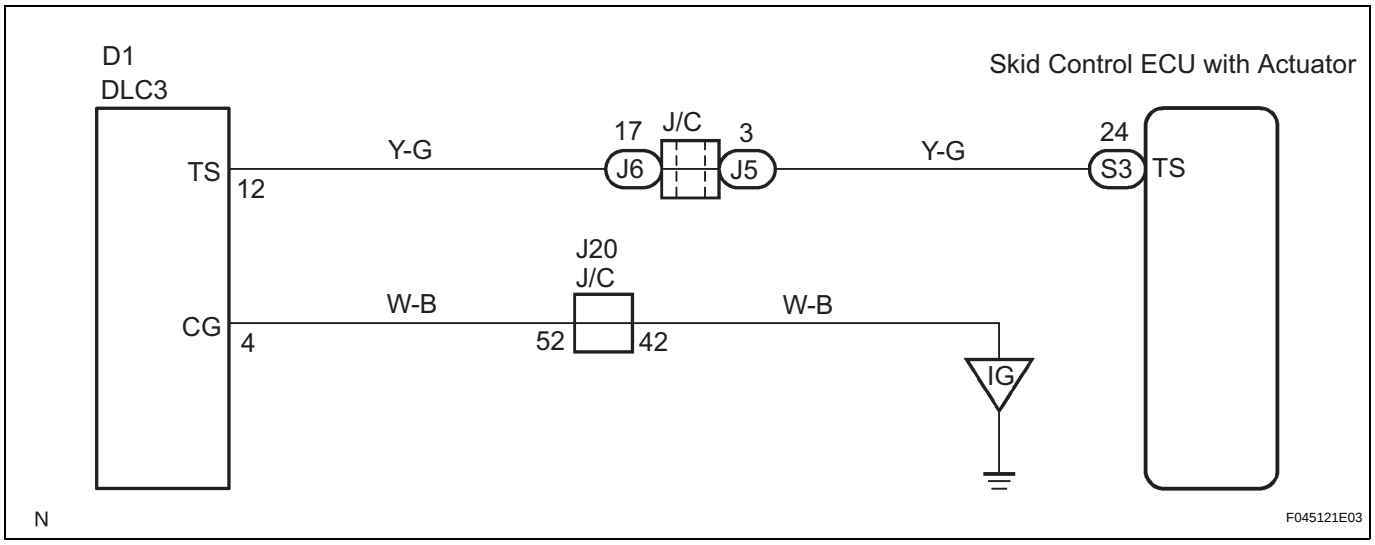

INSPECTION PROCEDURE

1	INSPECT DLC3

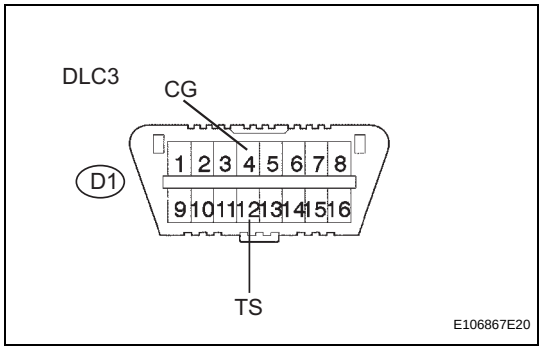

(a) Turn the ignition switch to the ON position.
(b) Measure the voltage according to the value(s) in the table below.

Standard voltage

Tester Connection	Specified Condition
D1-12 (TS) - D1-4 (CG)	10 to 14 V

NG → **REPAIR OR REPLACE HARNESS OR CONNECTOR**

OK

2	CHECK HARNESS AND CONNECTOR (TS of DLC3 - SKID CONTROL ECU)

(a) Disconnect the skid control ECU connector.

BC

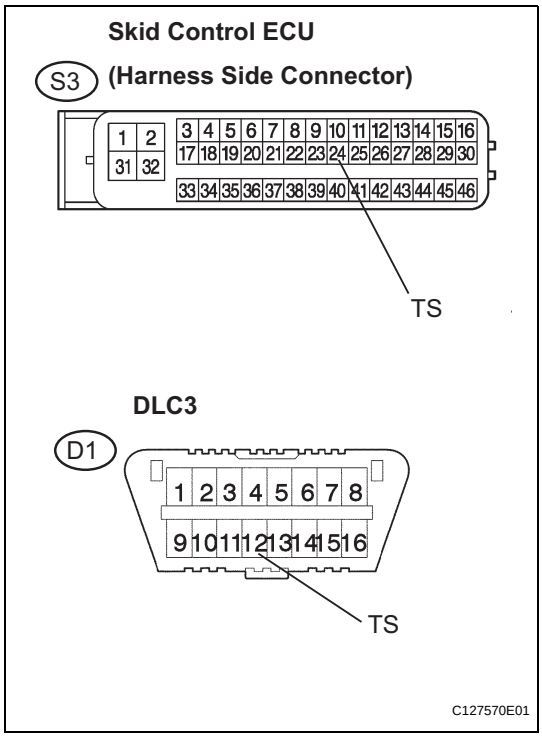

(b) Measure the resistance according to the value(s) in the table below.

Standard resistance

Tester Connection	Specified Condition
S3-24 (TS) - D1-12 (TS)	Below 1 Ω

(c) Measure the resistance according to the value(s) in the table below.

Standard resistance

Tester Connection	Specified Condition
S3-24 (TS) - Body ground	10 kΩ or higher

NOTICE:
When replacing the brake actuator assembly, perform zero point calibration (See page BC-70).

NG → **REPAIR OR REPLACE HARNESS OR CONNECTOR**

OK

REPLACE BRAKE ACTUATOR ASSEMBLY