DTC	43	ABS Control System Malfunction

DESCRIPTION

This DTC is output when the VSC system detects a malfunction in the ABS control system.

DTC Code	DTC Detection Condition	Trouble Area
43	Malfunction in the ABS control system.	ABS control system

INSPECTION PROCEDURE

NOTICE:

When replacing the brake actuator assembly, perform zero point calibration (See page BC-70).

1 CHECK ABS CONTROL SYSTEM

(a) Clear the DTC (See page BC-82).
(b) Turn the ignition switch to the ON position.
(c) Check if the same DTC is recorded (See page BC-82).

Result

Result	Proceed to
DTC (ABS control system DTC) is not output	A
DTC (ABS control system DTC) is output	B

B → **REPAIR CIRCUIT INDICATED BY OUTPUT DTC (See page BC-88)**

A

2 RECONFIRM DTC

(a) Turn the ignition switch off.
(b) Clear the DTC (See page BC-82).
(c) Start the engine.
(d) Drive the vehicle at a speed of approximately 40 km/h (25 mph) or more for 60 seconds or more.
(e) Check if the same DTC is recorded (See page BC-82).

Result

Result	Proceed to
DTC (43) is not output	A
DTC (43) is output	B

B → **REPLACE BRAKE ACTUATOR ASSEMBLY**

A

CHECK FOR INTERMITTENT PROBLEMS (SYMPTOM SIMULATION)

DTC	C0200/31	Right Front Wheel Speed Sensor Signal

DTC	C0205/32	Front Speed Sensor LH Circuit

DTC	C1235/35	Foreign Object is Attached on Tip of Front Speed Sensor RH

DTC	C1236/36	Foreign Object is Attached on Tip of Front Speed Sensor LH

DESCRIPTION

The speed sensor detects wheel speed and sends the appropriate signals to the ECU. These signals are used to control the ABS control system. The front and rear rotors have 48 serrations each.

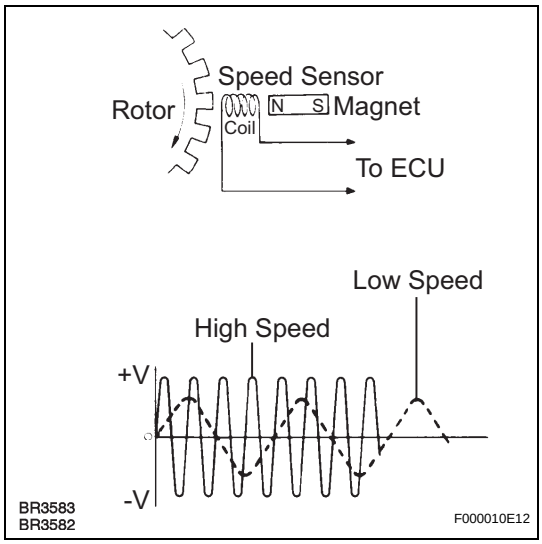

When the rotors rotate, the magnetic field emitted by the permanent magnet in the speed sensor generates AC voltage. Since the frequency of this AC voltage changes in direct proportion to the speed of the rotor, the frequency is used by the ECU to detect the speed of each wheel.

DTC Code	DTC Detection Condition	Trouble Area
C0200/31 C0205/32	When any of the following is detected: 1. At a vehicle speed of 10 km/h (6 mph) or more, an open or short in the sensor signal circuit continues for 1 sec. or more. 2. Momentary interruption of sensor signal of faulty wheel occurs 7 times or more. 3. Sensor signal circuit is open for 0.5 sec. or more.	• Right front and left front speed sensor • Each speed sensor circuit • Speed sensor rotor • Sensor installation
C1235/35 C1236/36	With vehicle speed at 20 km/h (12 mph) or more, sensor signal of faulty wheel generated noise for 5 sec. or more.	• Right front and left front speed sensor • Sensor installation

HINT:

- DTC C0200/31 and C1235/35 are for the right front speed sensor.
- DTC C0205/32 and C1236/36 are for the left front speed sensor.

WIRING DIAGRAM

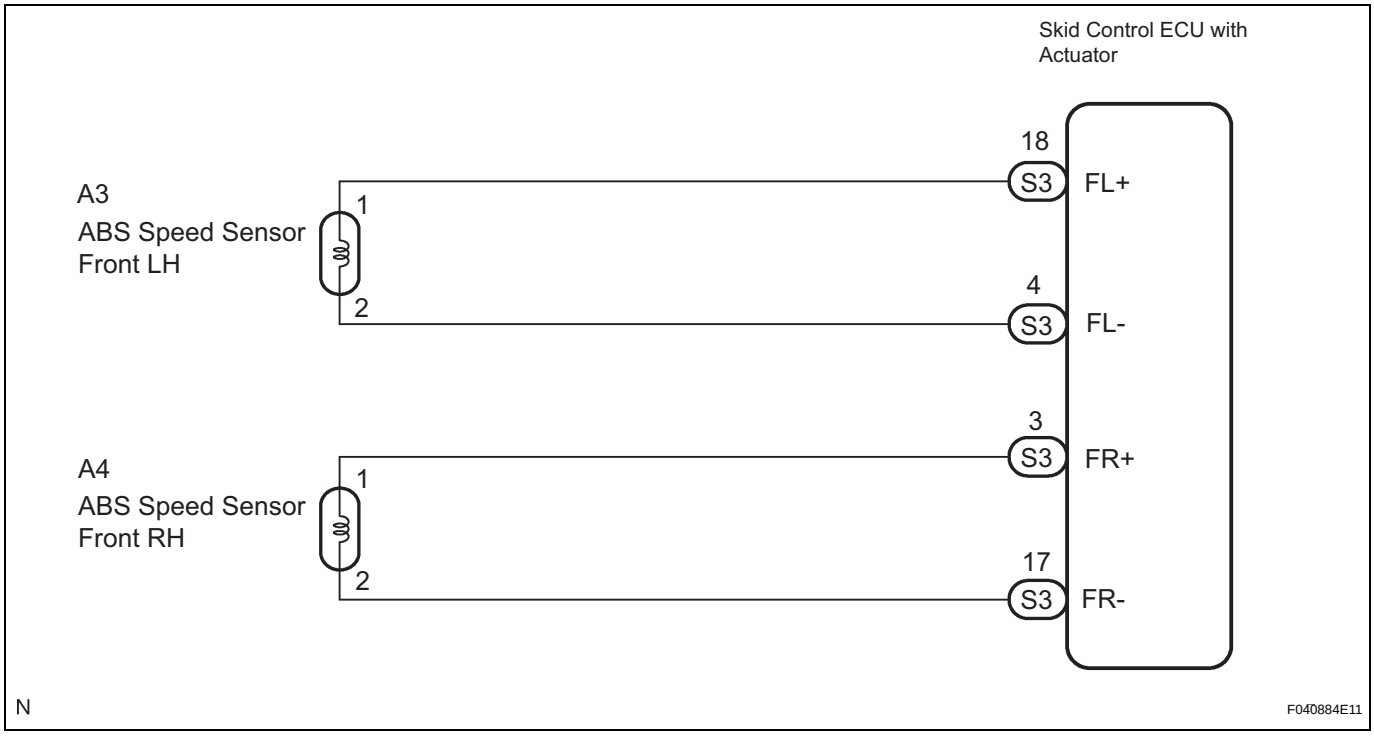

INSPECTION PROCEDURE

1	READ VALUE ON INTELLIGENT TESTER (FRONT SPEED SENSOR)

(a) Connect the intelligent tester to the DLC3.
(b) Start the engine.
(c) Select the DATA LIST mode on the intelligent tester.

ABS / VSC:

Tester Display	Measurement Item/Range	Normal Condition
WHEEL SPD FR	Wheel speed sensor (FR) reading / min.: 0 km/h (0 MPH), max.: 326 km/h (202 MPH)	Actual wheel speed
WHEEL SPD FL	Wheel speed sensor (FL) reading / min.: 0 km/h (0 MPH), max.: 326 km/h (202 MPH)	Actual wheel speed

(d) Check that there is no difference between the speed value output from the speed sensor displayed on the intelligent tester and the speed value displayed on the speedometer when driving the vehicle.
OK:
There is almost no difference from the displayed speed value.
HINT:
There is tolerance of +- 10 % in the speedometer indication.

NG → **Go to step 3**

OK

BC

2	CHECK SPEED SENSOR AND SENSOR ROTOR SERRATIONS

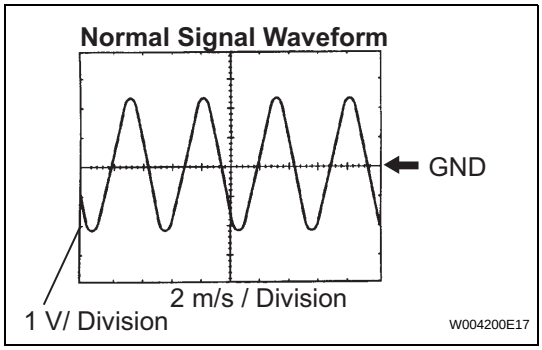

(a) INSPECTION USING OSCILLOSCOPE
(1) Connect the oscilloscope to terminal FR+ and FR- or FL+ and FL- of the skid control ECU.
(2) Drive the vehicle at about 19 mph (30 km/h), and check the signal waveform.
OK:
A waveform as shown in a figure should be output.
HINT:
- As the vehicle speed (wheel revolution speed) increases, a cycle of the waveform narrows and the fluctuation in the output voltage becomes greater.
- When noise is identified in the waveform on the oscilloscope, error signals are generated due to the speed sensor rotor's scratches, looseness or foreign matter attached to it.

NOTICE:
When replacing the brake actuator assembly, perform zero point calibration (See page BC-70).

NG → **Go to step 6**

OK

REPLACE BRAKE ACTUATOR ASSEMBLY

3	INSPECT FRONT SPEED SENSOR

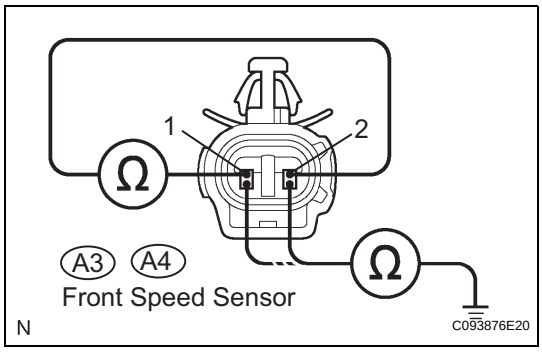

(a) Make sure that there is no looseness at the connectors' locking part and connecting part of connector.
(b) Disconnect the speed sensor connector.
(c) Measure the resistance according to the value(s) in the table below.
Standard resistance:
LH

Tester Connection	Specified Condition
A3-1 (FL+) - A3-2 (FL-)	0.6 to 2.5 kΩ

RH

Tester Connection	Specified Condition
A4-1 (FR+) - A4-2 (FR-)	0.6 to 2.5 kΩ

(d) Measure the resistance according to the value(s) in the table below.
Standard resistance:
LH

Tester Connection	Specified Condition
A3-1 (FL+) - Body ground	10 kΩ or higher

BC

Tester Connection	Specified Condition
A3-2 (FL-) - Body ground	10 kΩ or higher

RH

Tester Connection	Specified Condition
A4-1 (FR+) - Body ground	10 kΩ or higher
A4-2 (FR-) - Body ground	10 kΩ or higher

NOTICE:
Check the speed sensor signal after replacement (See page BC-72).

NG → **REPLACE FRONT SPEED SENSOR**

OK

4 CHECK HARNESS AND CONNECTOR (FRONT SPEED SENSOR - SKID CONTROL ECU)

Skid Control ECU Harness Side Connector Front View:

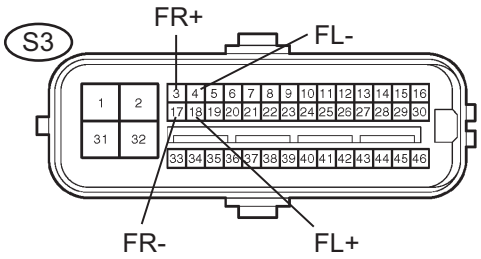

Front Speed Sensor Harness Side Connector Front View:

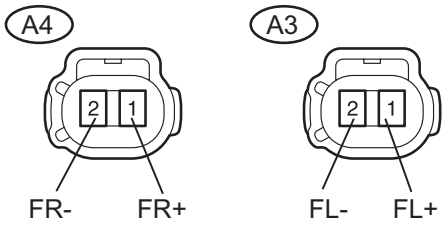

C136018E04

(a) Disconnect the skid control ECU connector and the front speed sensor connector.
(b) Measure the resistance according to the value(s) in the table below.
Standard resistance:
LH

Tester Connection	Specified Condition
S3-18 (FL+) - A3-1 (FL+)	Below 1 Ω
S3-4 (FL-) - A3-2 (FL-)	Below 1 Ω

RH

Tester Connection	Specified Condition
S3-3 (FR+) - A4-1 (FR+)	Below 1 Ω
S3-17 (FR-) - A4-2 (FR-)	Below 1 Ω

(c) Measure the resistance according to the value(s) in the table below.
Standard resistance:
LH

Tester Connection	Specified Condition
S3-18 (FL+) - Body ground	10 kΩ or higher
S3-4 (FL-) - Body ground	10 kΩ or higher

RH

Tester Connection	Specified Condition
S3-3 (FR+) - Body ground	10 kΩ or higher
S3-17 (FR-) - Body ground	10 kΩ or higher

NG → **REPAIR OR REPLACE HARNESS OR CONNECTOR**

OK

5	CHECK SPEED SENSOR AND SENSOR ROTOR SERRATIONS

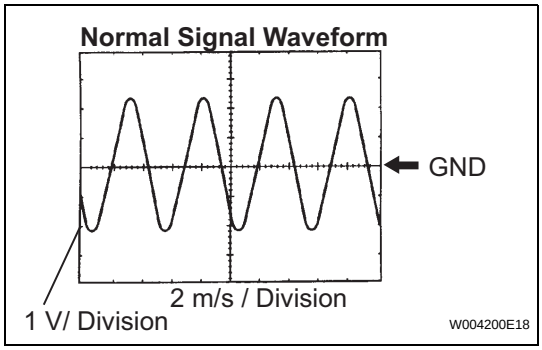

(a) INSPECTION USING OSCILLOSCOPE
(1) Connect the oscilloscope to terminal FR+ and FR- or FL+ and FL- of the skid control ECU.
(2) Drive the vehicle at about 19 mph (30 km/h), and check the signal waveform.
OK:
A waveform as shown in a figure should be output.
HINT:
- As the vehicle speed (Wheel revolution speed) increases, a cycle of the waveform narrows and the fluctuation in the output voltage becomes greater.
- When noise is identified in the waveform on the oscilloscope, error signals are generated due to the speed sensor rotor's scratches, looseness or foreign matter attached to it.

NOTICE:
When replacing the brake actuator assembly, perform zero point calibration (See page BC-70).

NG → **Go to step 6**

OK

REPLACE BRAKE ACTUATOR ASSEMBLY

6	CHECK FRONT SPEED SENSOR INSTALLATION

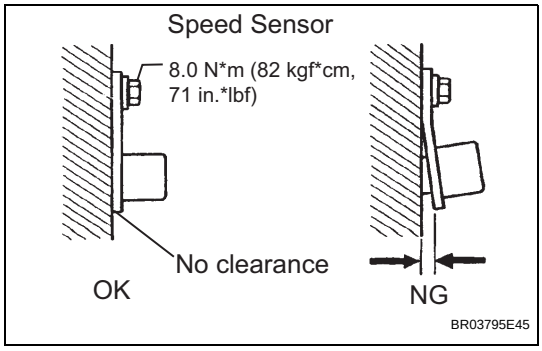

(a) Check the speed sensor installation.
OK:
The installation bolt is tightened properly. There is no clearance between the sensor and the front steering knuckle.
Torque: 8.0 N*m (82 kgf*cm, 71 in.*lbf)
NOTICE:
Check the speed sensor signal after the replacement (See page BC-72).

NG → **INSTALL FRONT SPEED SENSOR CORRECTLY**

OK

7	CHECK FRONT SPEED SENSOR TIP

(a) Remove the front speed sensor (See page BC-187).
(b) Check the sensor tip.

OK:

No scratches or foreign matter on the sensor tip.

NOTICE:

Check the speed sensor signal after the replacement (See page BC-72).

NG → **CLEAN OR REPLACE FRONT SPEED SENSOR**

OK

8	CHECK SPEED SENSOR ROTOR

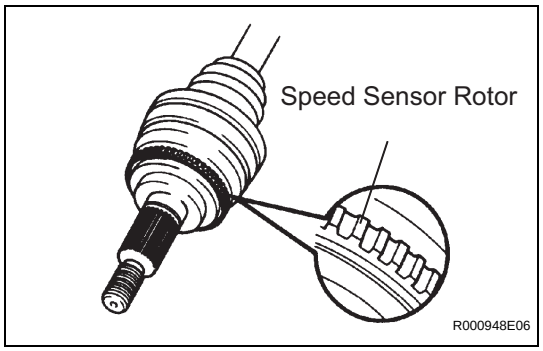

(a) Remove the front drive shaft (See page DS-5).

(b) Check the sensor rotor serrations.

OK:

No scratches, missing teeth or foreign matter on the rotors.

HINT:

If there is foreign matter in the rotor, remove it and check the output waveform after reassembly.

NOTICE:

- **Check the speed sensor signal after the replacement (See page BC-72).**
- **When replacing the brake actuator assembly, perform zero point calibration (See page BC-70).**

NG → **REPLACE FRONT DRIVE SHAFT ASSEMBLY (SPEED SENSOR ROTOR)**

OK

REPLACE BRAKE ACTUATOR ASSEMBLY