DTC	C1225/25	SM Solenoid Circuit

DESCRIPTION

This solenoid turns on when receiving signals the ECU and controls the pressure acting on the wheel cylinders to control the braking force.

DTC Code	DTC Detection Condition	Trouble Area
C1225/25	When any of the following is detected: 1. When SM1 or SM2 is ON, excessive electric current on SM1 or SM2 continues for 0.05 seconds or more. 2. When SM1 or SM2 is OFF, open circuit of SM1 or SM2 continues for 0.05 seconds or more. 3. When SM1 or SM2 is ON, open circuit of SM1 or SM2 continues for 0.1 seconds or more. 4. When SM1 or SM2 is ON, electric current application on SM1 or SM2 continues for 0.1 seconds or more. 5. Short to GND in the switching solenoid (SM1 or SM2) continues for 0.1 sec. or more. 6. Switching solenoids (SM1 and SM2) are shorted for 0.1 sec. or more.	• Brake actuator assembly • VSC solenoid circuit

WIRING DIAGRAM

Refer to DTCs C0226/21, C0236/22, C0246/23 and C0256/24 (See page BC-105).

INSPECTION PROCEDURE

1	RECONFIRM DTC

(a) Clear the DTCs (See page BC-82).
(b) Turn the ignition switch to the ON position.
(c) Are the same DTCs recorded?

Result

Result	Proceed to
DTC is output	A
DTC is not output	B

NOTICE:
When replacing brake actuator assembly, perform zero point calibration (See page BC-70).

B → END

A

REPLACE BRAKE ACTUATOR ASSEMBLY

DTC	C1231/31	Steering Angle Sensor Circuit Malfunction

DESCRIPTION

The steering angle sensor signal is sent to the skid control ECU through the CAN communication system. When there is a malfunction in the communication, it will be detected by the diagnosis function.

DTC Code	DTC Detection Condition	Trouble Area
C1231/31	When ECU IG1 terminal voltage is 9.5 V or more, the steering angle sensor malfunction signal is received.	• Steering angle sensor • Steering angle sensor circuit • +B circuit

WIRING DIAGRAM

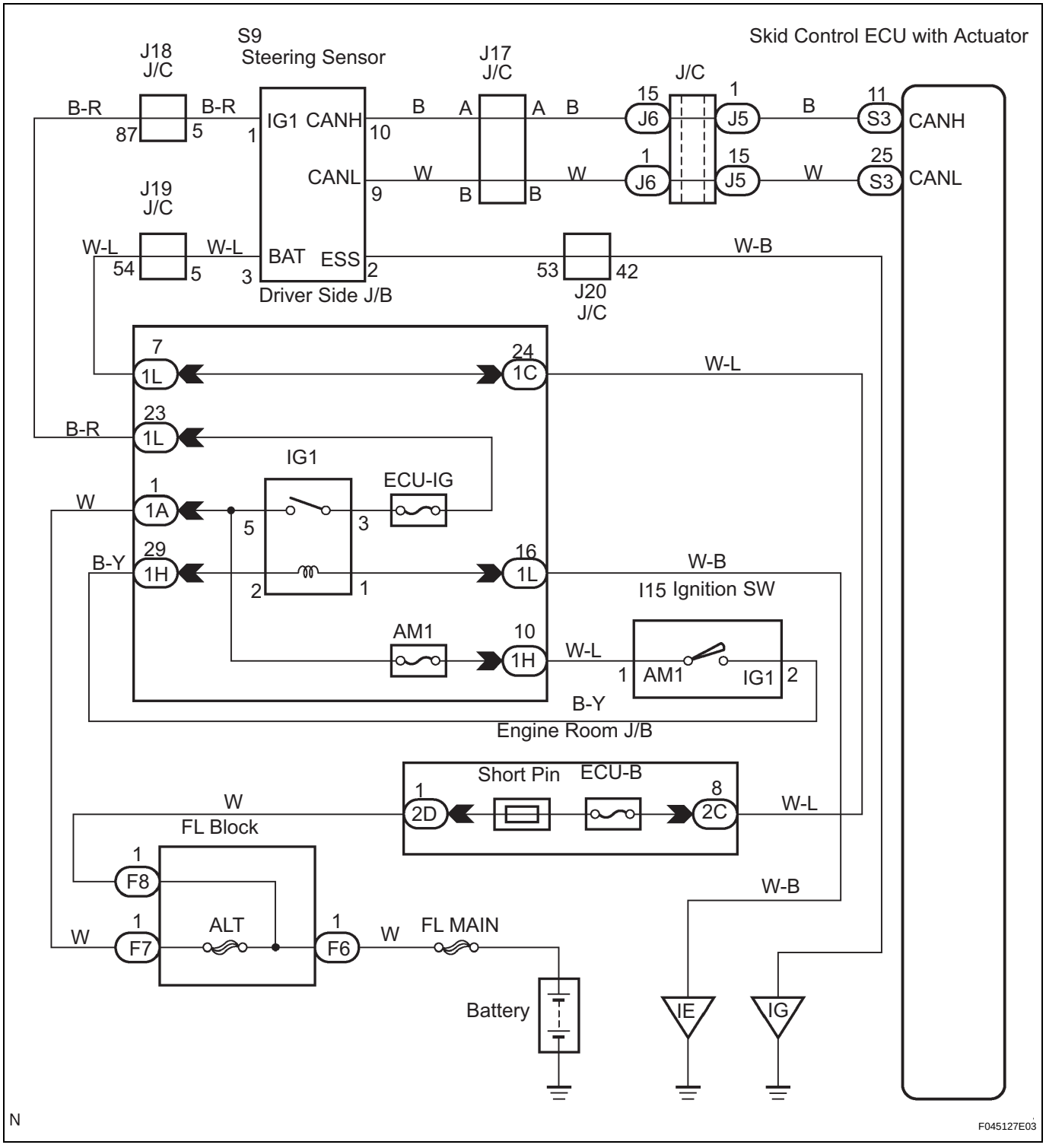

INSPECTION PROCEDURE

HINT:

- When U0073/94, U0100/65, U0123/62, U0124/95 or U0126/63 are output accompanied with C1231/31, inspect and repair the trouble areas indicated by U0073/94, U0100/65, U0123/62, U0124/95 or U0126/63 first.

BC

- When the speed sensor or the yaw rate sensor has trouble. DTCs for the steering angle sensor may be output even when the steering angle sensor is normal. When DTCs for the speed sensor or yaw rate sensor are output accompanied with other DTCs for the steering angle sensor, inspect and repair the speed sensor and yaw rate sensor first, and the n inspect and repair the steering angle sensor.

1	INSPECT STEERING ANGLE SENSOR

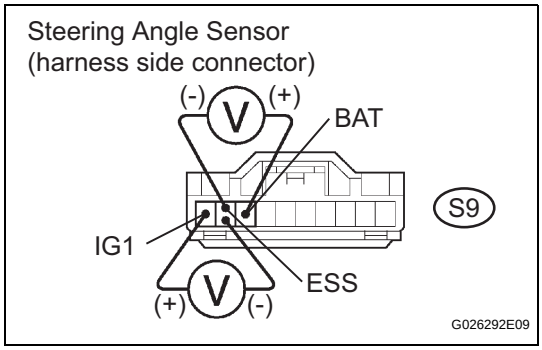

(a) Remove the steering wheel and the column lower cover.
(b) Disconnect the steering angle sensor connector.
(c) Turn the ignition switch to the ON position.
(d) Measure the voltage according to the value(s) in the table below.

Standard voltage

Tester Connection	Specified Condition
S9-1 (IG1) - S9-2 (ESS)	10 to 14 V

(e) Measure the voltage according to the value(s) in the table below.

Standard voltage

Tester Connection	Specified Condition
S9-3 (BAT) - S9-2 (ESS)	10 to 14 V

NG → **REPAIR OR REPLACE HARNESS OR CONNECTOR**

OK

REPLACE STEERING ANGLE SENSOR