DTC	U0073/94	Control Module Communication Bus OFF
DTC	U0100/65	Lost Communication with ECM / PCM
DTC	U0123/62	Lost Communication with Yaw Rate Sensor Module
DTC	U0124/95	Lost Communication with Lateral Acceleration Sensor Module
DTC	U0126/63	Lost Communication with Steering Angle Sensor Module

INSPECTION PROCEDURE

Refer to CAN communication system (See page CA-7).

ABS Warning Light Remains ON

DESCRIPTION

If any of the following is detected, the ABS warning light remains on.

- The skid control ECU connectors are disconnected from the skid control ECU.
- There is a malfunction in the skid control ECU internal circuit.
- There is an open in the harness between the combination meter and the skid control ECU.

HINT:

In some cases, the intelligent tester cannot be used when the skid control ECU is abnormal.

WIRING DIAGRAM

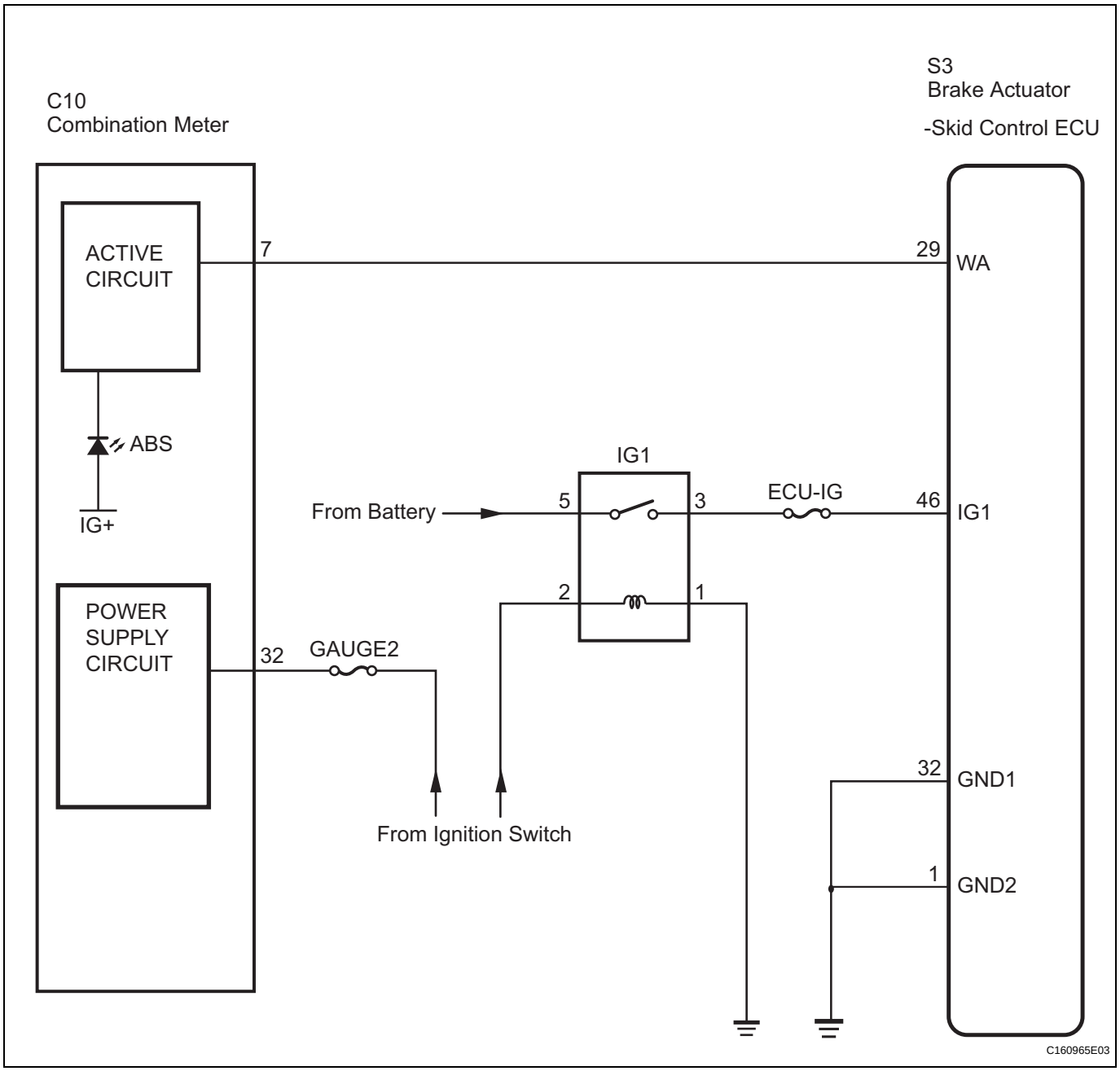

INSPECTION PROCEDURE

1	CHECK DTC

(a) Is DTC output for ABS?

Result

Result	Proceed to
DTC is not output	A
DTC is output	B

B → **REPAIR CIRCUITS INDICATED BY OUTPUT DTCS**

A

2	CHECK IF SKID CONTROL ECU CONNECTOR IS SECURELY CONNECTED

(a) Check the ECU connector's connecting condition.
OK:
The connector should be securely connected.

NG → **CONNECT CONNECTOR TO ECU CORRECTLY**

OK

3	CHECK BATTERY

(a) Check the battery voltage.
Standard voltage:
11 to 14 V

NG → **CHECK OR REPLACE CHARGING SYSTEM OR BATTERY**

OK

4	INSPECT SKID CONTROL ECU (IG1 TERMINAL)

(a) WHEN USING INTELLIGENT TESTER:
(1) Connect the intelligent tester to the DLC3.
(2) Start the engine.
(3) Select the DATA LIST mode on the intelligent tester.

ABS / VSC:

Tester Display	Measurement Item/Range	Normal Condition
IG VOLTAGE	ECU power supply voltage / UNDER / NORMAL	NORMAL: 9.5 V or over UNDER: Below 9.5 V

(4) Read the voltage condition output from the ECU displayed on the intelligent tester.
OK:
"Normal" is displayed.

(b) WHEN NOT USING INTELLIGENT TESTER:

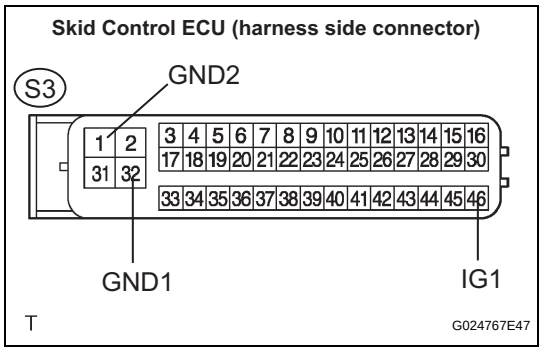

(1) Disconnect the skid control ECU connector.
(2) Turn the ignition switch to the ON position.
(3) Measure the voltage according to the value(s) in the table below.

Standard voltage

Tester Connection	Specified Condition
S3-46 (IG1) - S3-32 (GND1)	10 to 14 V
S3-46 (IG1) - S3-1 (GND2)	10 to 14 V

NG → **Go to step 6**

OK

5 CHECK ABS WARNING LIGHT

(a) WHEN USING INTELLIGENT TESTER:
(1) Connect the intelligent tester to the DLC3 and start the engine.
(2) Select the item "ABS WARN LIGHT" in the ACTIVE TEST and operate the ABS warning light on the intelligent tester.
(3) Check that "ON" and "OFF" of the ABS warning light can be shown on the combination meter by the intelligent tester.

(b) WHEN NOT USING INTELLIGENT TESTER:
(1) Turn the ignition switch off and disconnect the connector from the skid control ECU.
(2) Ground the terminal WA of the skid control ECU.
(3) Turn the ignition switch to the ON position.
(4) Check that the ABS warning light goes off.

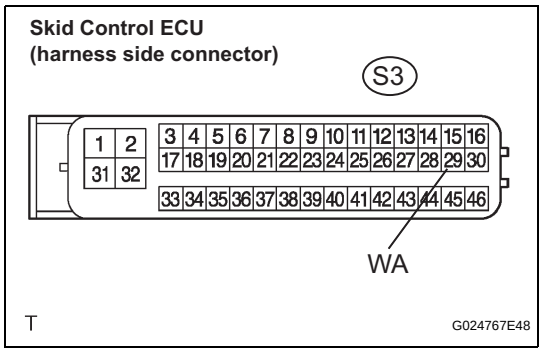

OK → **REPAIR OR REPLACE ABS WARNING LIGHT CIRCUIT**

NG

REPLACE BRAKE ACTUATOR ASSEMBLY

6 CHECK HARNESS AND CONNECTOR (SKID CONTROL ECU - BODY GROUND)

(a) Disconnect the skid control ECU connector.

BC

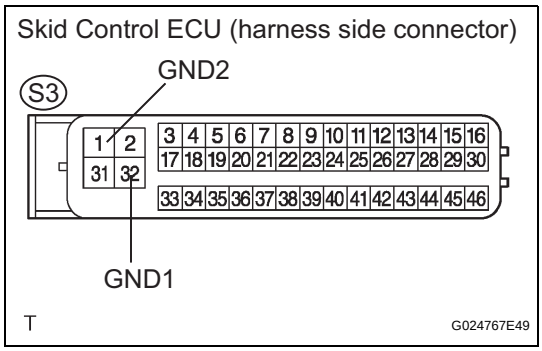

(b) Measure the resistance according to the value(s) in the table below.

Standard resistance

Tester Connection	Specified Condition
S3-1 (GND2) - Body ground	Below 1 Ω
S3-32 (GND1) - Body ground	Below 1 Ω

NOTICE:
When replacing brake actuator assembly, perform zero point calibration (See page BC-70).

NG → **REPAIR OR REPLACE HARNESS OR CONNECTOR**

OK

REPLACE BRAKE ACTUATOR ASSEMBLY