VSC Warning Light Remains ON

DESCRIPTION

The skid control ECU is connected to the combination meter via CAN and multiplex communications. If the skid control ECU stores DTCs to shut down TRAC and VSC operation, the VSC warning light comes on in the combination meter.

WIRING DIAGRAM

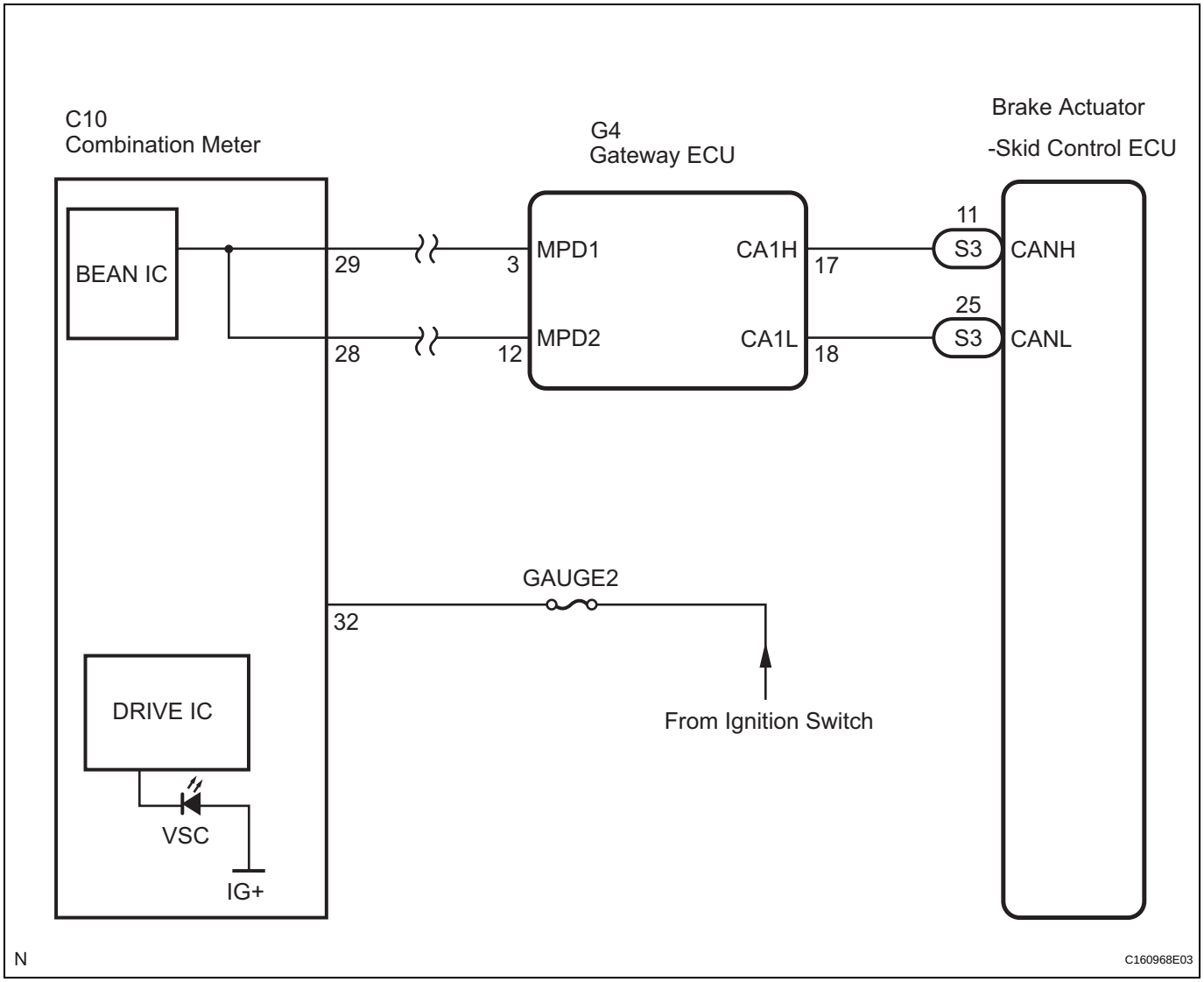

INSPECTION PROCEDURE

NOTICE:

When replacing the brake actuator assembly, perform zero point calibration (See page BC-70).

1	CHECK CAN COMMUNICATION SYSTEM

(a) Check if the CAN communication system DTC is output (See page CA-17).

BC

Result

Result	Proceed to
CAN communication system DTC is not output	A
CAN communication system DTC is output	B

B → INSPECT CAN COMMUNICATION SYSTEM

A

2 CHECK MULTIPLEX COMMUNICATION SYSTEM

(a) Check if the multiplex communication system DTC is output (See page MP-14).

Result

Result	Proceed to
Multiplex communication system DTC is not output	A
Multiplex communication system DTC is output	B

B → INSPECT MULTIPLEX COMMUNICATION SYSTEM

A

3 CHECK IF SKID CONTROL ECU CONNECTOR IS SECURELY CONNECTED

(a) Check if the skid control ECU connector is securely connected.
OK:
The connector is securely connected.

NG → CONNECT CONNECTOR TO ECU CORRECTLY

OK

4 CHECK BATTERY

(a) Check the battery voltage.
Standard voltage:
11 to 14 V

NG → CHECK OR REPLACE CHARGING SYSTEM OR BATTERY

OK

5 INSPECT COMBINATION METER ASSEMBLY

(a) Check the combination meter (See page ME-4).
OK:
The combination meter is normal.

HINT:
If troubleshooting has been carried out according to the Problem Symptoms Table, refer back to the table and proceed to the next step before replacing the part (See page BC-79).

NG → **REPLACE COMBINATION METER ASSEMBLY**

OK

REPLACE BRAKE ACTUATOR ASSEMBLY