Brake Warning Light Remains ON

DESCRIPTION

The BRAKE warning light comes on when the brake fluid is insufficient, the parking brake is applied or the EBD is defective.

WIRING DIAGRAM

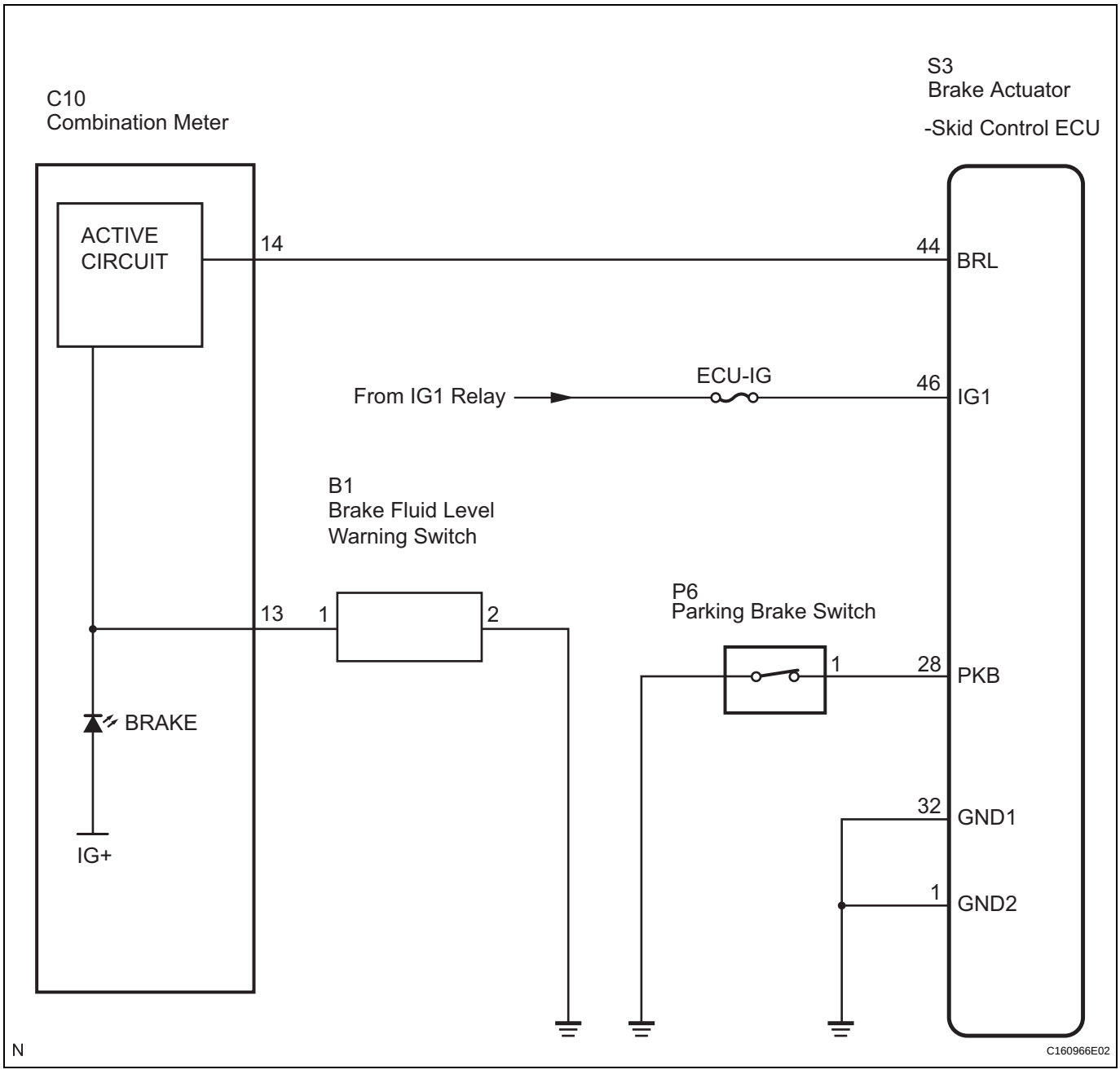

INSPECTION PROCEDURE

HINT:

When releasing the parking brake, move the shift lever into the P position in an AT vehicle, and choke in an MT vehicle to hold the vehicle for safety.

1	CHECK BRAKE FLUID LEVEL

(a) Check that the brake fluid level is proper.

NG → ADD BRAKE FLUID

OK

2	CHECK DTC

(a) Are the DTC recorded? (See page BC-82)

Result

Result	Proceed to
DTC is output	A
DTC is not output	B

B → Go to step 3

A

REPAIR CIRCUITS INDICATED BY OUTPUT DTCS

3	CHECK BRAKE WARNING LIGHT

(a) WHEN USING INTELLIGENT TESTER:
(1) Connect the intelligent tester to the DLC3.
(2) Start the engine.
(3) Select the item "BRAKE WARN LIGHT" in the ACTIVE TEST and operate the BRAKE warning light on the intelligent tester.

ABS / VSC:

Tester Display	Test Part	Control Range	Diagnostic Note
BRAKE WRN LIGHT	BRAKE warning light	Warning light ON / OFF	Observe combination meter

(4) Check that "ON" and "OFF" of the BRAKE warning light are indicated on the combination meter when using the intelligent tester.
OK:
Turn the BRAKE warning light on or off in accordance with the intelligent tester.

(b) WHEN NOT USING INTELLIGENT TESTER:
(1) Turn the ignition switch off and disconnect the connector from the skid control ECU.

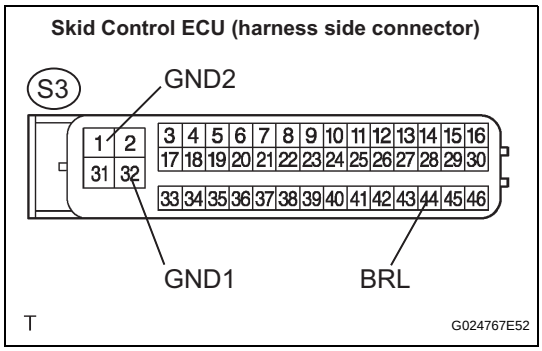

(2) Ground terminal BRL of the skid control ECU.
(3) Turn the ignition switch to the ON position.
(4) Check that the brake warning light.

OK:

Turn the light on or off in accordance with the connection of terminal GND and BRL.

NOTICE:

When replacing the brake actuator assembly, perform zero point calibration (See page BC-70).

NG → **Go to step 4**

OK

REPLACE BRAKE ACTUATOR ASSEMBLY

4 INSPECT PARKING BRAKE SWITCH

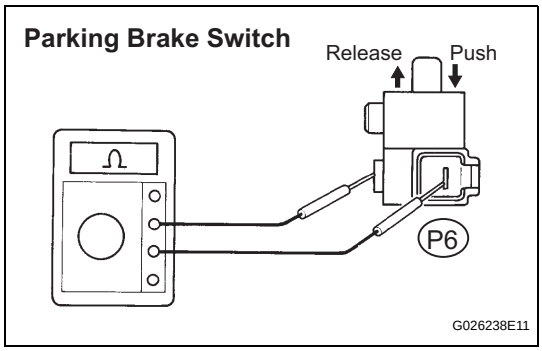

(a) Remove the parking brake switch connector.
(b) Measure the resistance according to the value(s) in the table below.

Standard resistance

Tester Connection	Switch Condition	Specified Condition
P6-1 - Ground part	Released	Below 1 Ω
P6-1 - Ground part	Pushed in	10 kΩ or higher

NG → **REPLACE PARKING BRAKE SWITCH**

OK

5 CHECK HARNESS AND CONNECTOR (SKID CONTROL ECU - PARKING BRAKE SWITCH)

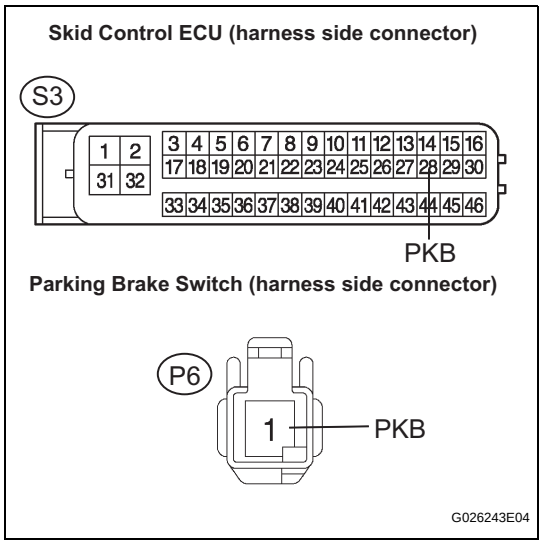

(a) Disconnect the skid control ECU connector and the parking brake switch connector.
(b) Measure the resistance according to the value(s) in the table below.

Standard resistance

Tester Connection	Specified Condition
S3-28 (PKB) - P6-1 (PKB)	Below 1 Ω

(c) Measure the resistance according to the value(s) in the table below.

Standard resistance

Tester Connection	Specified Condition
S3-28 (PKB) - Body ground	10 kΩ or higher

NG → **REPAIR OR REPLACE HARNESS OR CONNECTOR**

BC

OK

6	INSPECT BRAKE FLUID LEVEL WARNING SWITCH

(a) Remove the reservoir tank cap and strainer.
(b) Disconnect the brake fluid level warning switch connector.
(c) Measure the resistance according to the value(s) in the table below.

Standard resistance

Tester Connection	Switch Condition	Specified Condition
(B1-1) - (B1-2)	Float UP	10 kΩ or higher
(B1-1) - (B1-2)	Float DOWN	Below 1 Ω

Brake Fluid Level Warning Switch

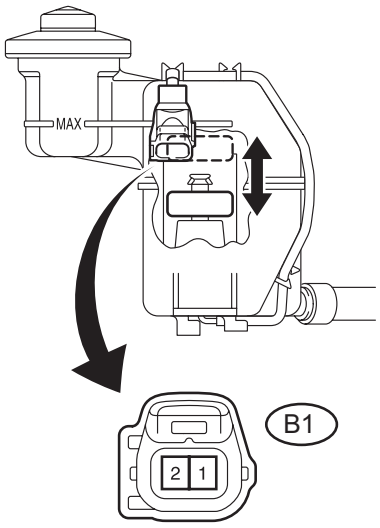

N C119428E02

NG → **REPLACE BRAKE MASTER CYLINDER RESERVOIR SUB-ASSEMBLY (BRAKE FLUID LEVEL WARNING SWITCH)**

OK

7	CHECK HARNESS AND CONNECTOR (BRAKE FLUID LEVEL WARNING SWITCH - COMBINATION METER)

(a) Disconnect the combination meter connector and the brake fluid level warning switch connector.

Combination Meter (Wire Harness Side) Connector View

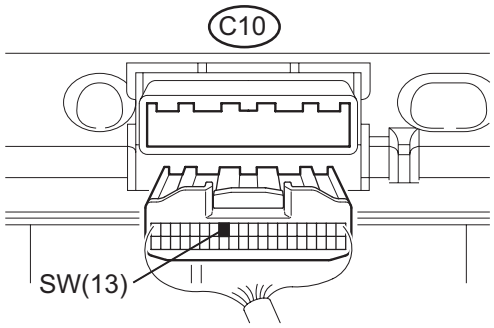

Brake Fluid Level Warning Switch Harness Side Connector Front View:

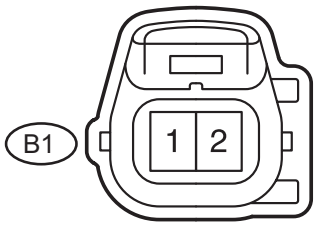

P C119429E03

(b) Measure the resistance according to the value(s) in the table below.

Standard resistance

Tester Connection	Specified Condition
(C10-13) - (B1-1)	Below 1 Ω

(c) Measure the resistance according to the value(s) in the table below.

Standard resistance

Tester Connection	Specified Condition
(C10-13) - Body ground	10 kΩ or higher

NG → **REPAIR OR REPLACE HARNESS OR CONNECTOR**

OK

REPAIR OR REPLACE COMBINATION METER ASSEMBLY