TRAC OFF Indicator Light Remains ON

DESCRIPTION

The skid control ECU is connected to the combination meter via CAN and multiplex communications. When the traction OFF switch is turned on, the TRAC OFF indicator light will come on (for 2WD model).

WIRING DIAGRAM

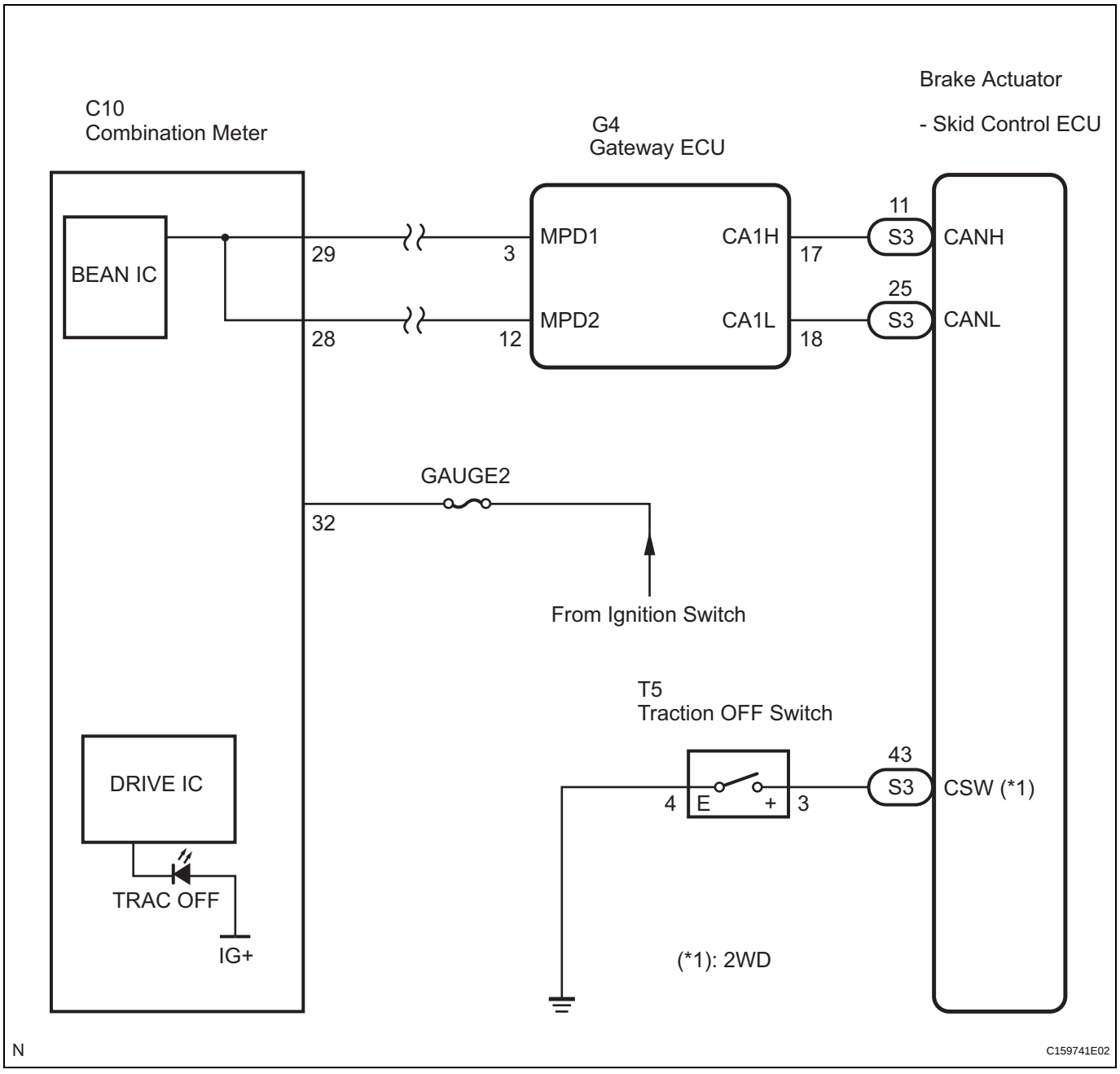

INSPECTION PROCEDURE

NOTICE:

When replacing the brake actuator assembly, perform zero point calibration (See page BC-70).

BC

1	CHECK CAN COMMUNICATION SYSTEM

(a) Check if the CAN communication system DTC is output (See page CA-17).

Result

Result	Proceed to
CAN communication system DTC is not output	A
CAN communication system DTC is output	B

B → INSPECT CAN COMMUNICATION SYSTEM

A

2	CHECK MULTIPLEX COMMUNICATION SYSTEM

(a) Check if the multiplex communication system DTC is output (See page MP-14).

Result

Result	Proceed to
Multiplex communication system DTC is not output	A
Multiplex communication system DTC is output	B

B → INSPECT MULTIPLEX COMMUNICATION SYSTEM

A

3	CHECK IF SKID CONTROL ECU CONNECTOR IS SECURELY CONNECTED

(a) Check if the skid control ECU connector is securely connected.
OK:
The connector is securely connected.

NG → CONNECT CONNECTOR TO ECU CORRECTLY

OK

4	CHECK BATTERY

(a) Check the battery voltage.
Standard voltage:
11 to 14 V

NG → CHECK OR REPLACE CHARGING SYSTEM OR BATTERY

OK

BC

5 INSPECT SKID CONTROL ECU (CSW TERMINAL)

Skid Control ECU Harness Side Connector Front View:

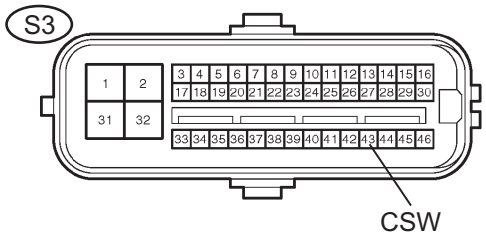

C141673E25

(a) Disconnect the skid control ECU connector.
(b) Measure the resistance according to the value(s) in the table below.

Standard resistance

Tester Condition	Switch Condition	Specified Condition
S3-43 (CSW) - Body ground	Traction OFF Switch OFF (Not pressed)	10 kΩ or higher

NG → **Go to step 7**

OK

6 INSPECT COMBINATION METER ASSEMBLY

(a) Reconnect the skid control ECU connector.
(b) Perform Active Test of the combination meter (meter CPU) using the intelligent tester (See page ME-19).

OK:

The TRAC OFF indicator light turns on or off in accordance with the intelligent tester.

HINT:

If troubleshooting has been carried out according to the Problem Symptoms Table, refer back to the table and proceed to the next step before replacing the part (See page BC-79).

NG → **REPLACE COMBINATION METER ASSEMBLY**

OK

REPLACE BRAKE ACTUATOR ASSEMBLY

7	INSPECT TRACTION OFF SWITCH

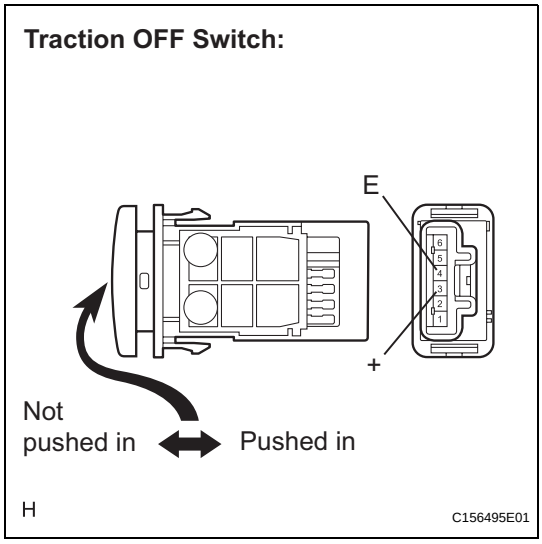

(a) Disconnect the traction OFF switch connector.
(b) Measure the resistance according to the value(s) in the table below.

Standard resistance

Tester Connection	Switch Condition	Specified Condition
3 (+) - 4 (E)	Switch is pushed in	Below 1 Ω
3 (+) - 4 (E)	Switch is not pushed in	10 kΩ or higher

NG → **REPLACE TRACTION OFF SWITCH**

OK

8	CHECK HARNESS AND CONNECTOR (SKID CONTROL ECU - TRACTION OFF SWITCH)

Skid Control ECU Harness Side Connector Front View:

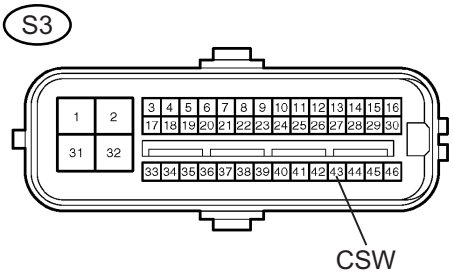

Traction OFF Switch Harness Side Connector Front View:

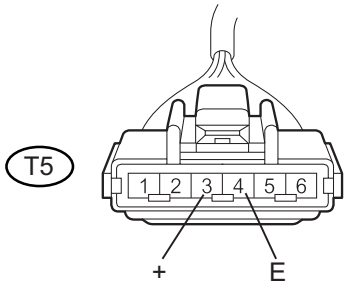

C159743E01

(a) Measure the resistance according to the value(s) in the table below.

Standard resistance

Tester Connection	Condition	Specified Condition
S3-43 (CSW) - T5-3 (+)	Always	Below 1 Ω
S3-43 (CSW) - Body ground	Always	10 kΩ or higher
T5-4 (E) - Body ground	Always	Below 1 Ω

HINT:
If troubleshooting has been carried out according to the Problem Symptoms Table, refer back to the table and proceed to the next step (See page BC-79).

NG → **REPAIR OR REPLACE HARNESS OR CONNECTOR**

OK

REPLACE BRAKE ACTUATOR ASSEMBLY