Slip Indicator Light Remains ON

DESCRIPTION

The skid control ECU is connected to the combination meter via CAN and multiplex communications.
The SLIP indicator blinks during VSC and/or TRAC operation.
When the system fails, the SLIP indicator comes on to warn the driver.

WIRING DIAGRAM

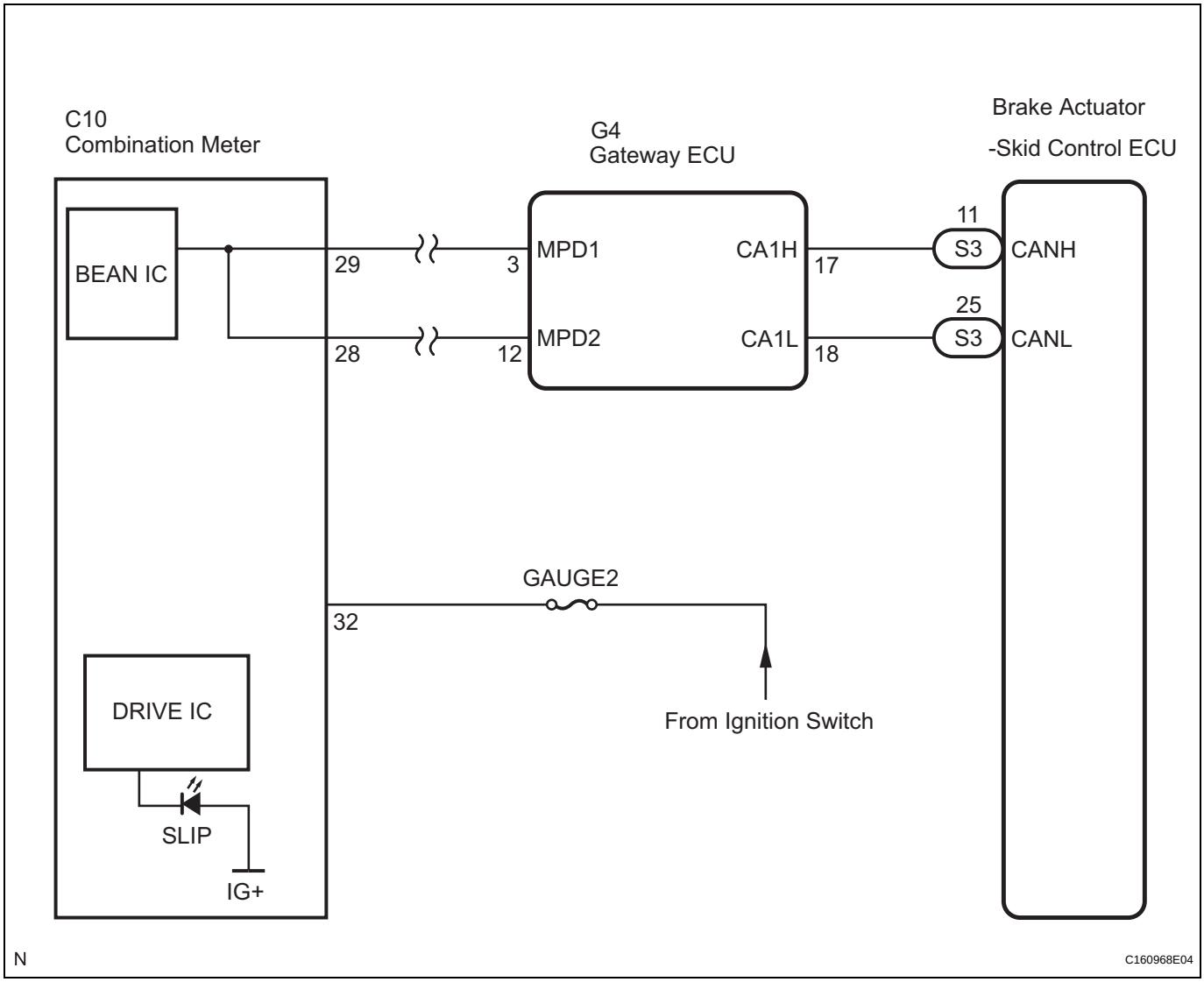

INSPECTION PROCEDURE

NOTICE:
When replacing the brake actuator assembly, perform zero point calibration (See page BC-70).

BC

1	CHECK CAN COMMUNICATION SYSTEM

(a) Check if the CAN communication system DTC is output (See page CA-17).

Result

Result	Proceed to
CAN communication system DTC is not output	A
CAN communication system DTC is output	B

B → **INSPECT CAN COMMUNICATION SYSTEM**

A

2 CHECK MULTIPLEX COMMUNICATION SYSTEM

(a) Check if the multiplex communication system DTC is output (See page MP-14).

Result

Result	Proceed to
Multiplex communication system DTC is not output	A
Multiplex communication system DTC is output	B

B → **INSPECT MULTIPLEX COMMUNICATION SYSTEM**

A

3 CHECK IF SKID CONTROL ECU CONNECTOR IS SECURELY CONNECTED

(a) Check if the skid control ECU connector is securely connected.
OK:
The connector is securely connected.

NG → **CONNECT CONNECTOR TO ECU CORRECTLY**

OK

4 CHECK BATTERY

(a) Check the battery voltage.
Standard voltage:
11 to 14 V

NG → **CHECK OR REPLACE CHARGING SYSTEM OR BATTERY**

OK

5 INSPECT COMBINATION METER ASSEMBLY

(a) Perform Active Test of the combination meter (meter CPU) using the intelligent tester (See page ME-19).

OK:

The SLIP indicator light turns on or off in accordance with the intelligent tester.

HINT:

If troubleshooting has been carried out according to the Problem Symptoms Table, refer back to the table and proceed to the next step before replacing the part (See page BC-79).

NG → **REPLACE COMBINATION METER ASSEMBLY**

OK

REPLACE BRAKE ACTUATOR ASSEMBLY