TC and CG Terminal Circuit

DESCRIPTION

Connecting terminals TC and CG of the DLC3 causes the ECU to display the DTC by blinking the ABS warning light and/or VSC warning light.

WIRING DIAGRAM

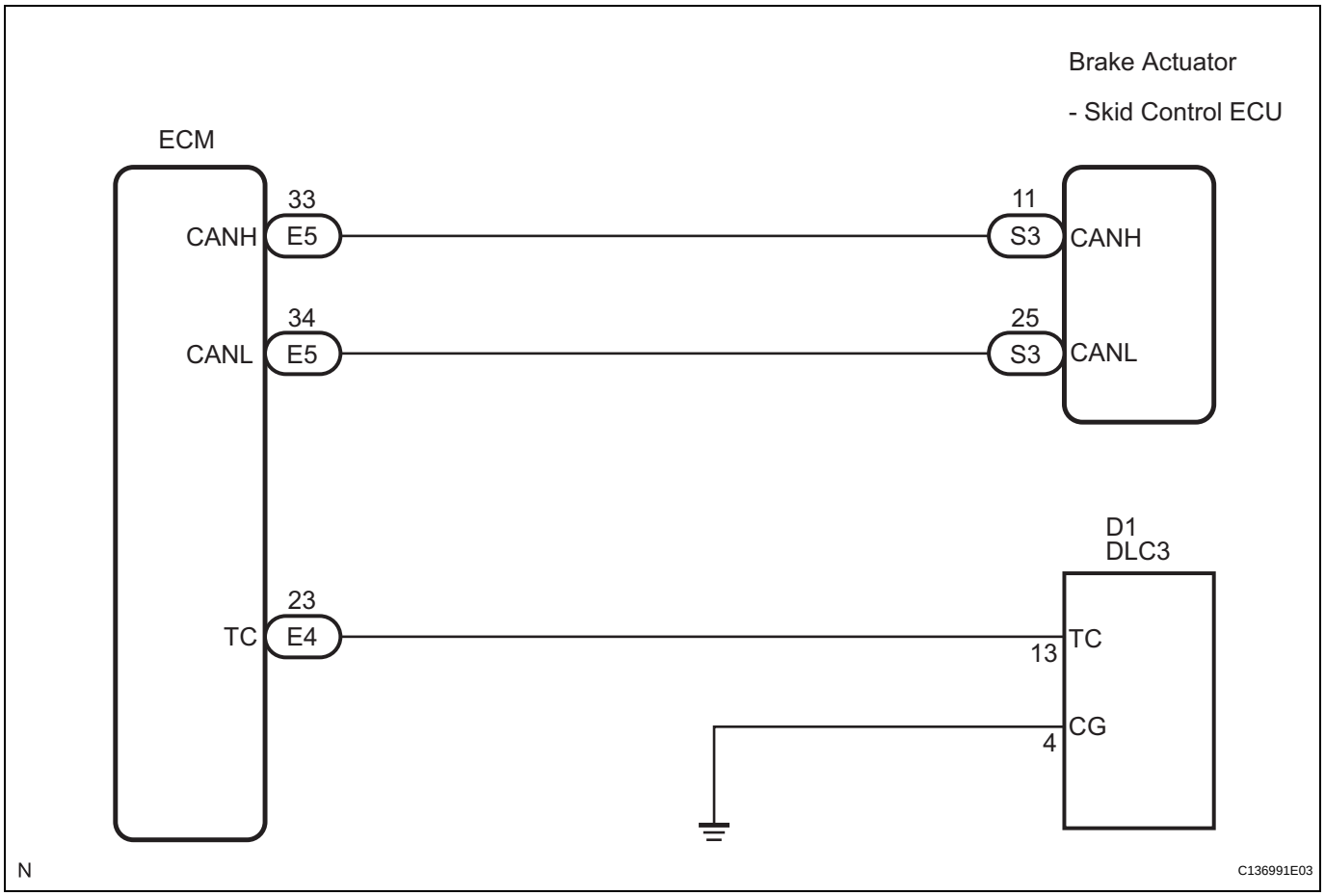

INSPECTION PROCEDURE

NOTICE:

When replacing the brake actuator assembly, perform zero point calibration (See page BC-70).

1	CHECK CAN COMMUNICATION SYSTEM

(a) Check if the CAN communication system DTC is output (See page BC-82).

Result

Result	Proceed to
CAN communication system DTC is not output	A
CAN communication system DTC is output	B

B → INSPECT CAN COMMUNICATION SYSTEM

BC

A

2	INSPECT DLC3

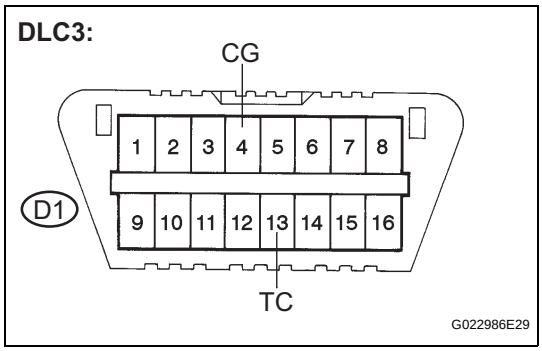

(a) Turn the ignition switch to the ON position.
(b) Measure the voltage according to the value(s) in the table below.

Standard voltage

Tester Connection	Switch Condition	Specified Condition
D1-13 (TC) - D1-4 (CG)	Ignition switch ON	10 to 14 V

Result

Result	Proceed to
NG	A
OK	B

B → Go to step 5

A

3 CHECK HARNESS AND CONNECTOR (TC of DLC3 - ECM)

DLC3:

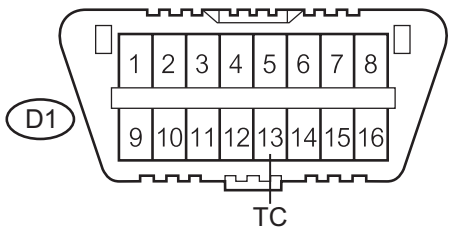

ECM Wire Harness View:

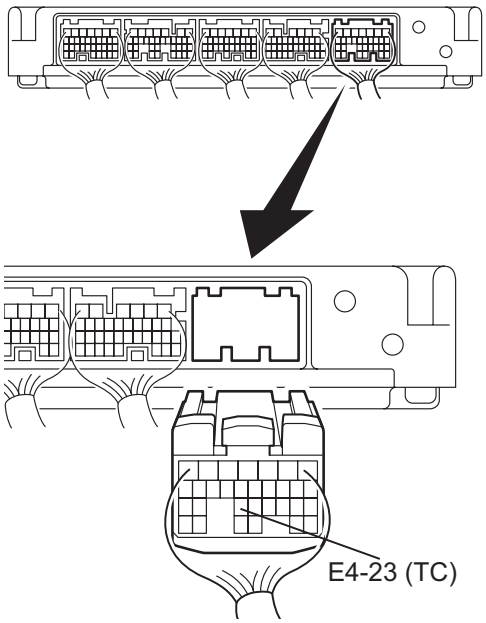

C146756E03

(a) Turn the ignition switch off.
(b) Disconnect the ECM connector.
(c) Measure the resistance according to the value(s) in the table below.

Standard resistance

Tester Connection	Condition	Specified Condition
D1-13 (TC) - E4-23 (TC)	Always	Below 1 Ω
D1-13 (TC) - Body ground	Always	10 kΩ or higher

NG → **REPAIR OR REPLACE HARNESS OR CONNECTOR**

OK

4 CHECK HARNESS AND CONNECTOR (CG of DLC3 - BODY GROUND)

DLC3:

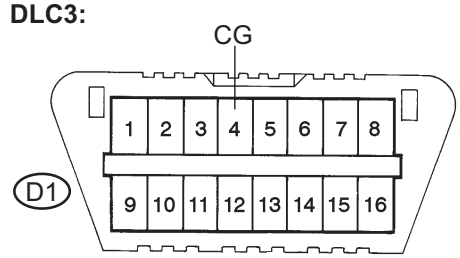

G022986E30

(a) Measure the resistance according to the value(s) in the table below.

Standard resistance

Tester Connection	Condition	Specified Condition
D1-4 (CG) - Body ground	Always	Below 1 Ω

NG → **REPAIR OR REPLACE HARNESS OR CONNECTOR**

OK

BC

5	CHECK ECM (TC of DLC3 INPUT)

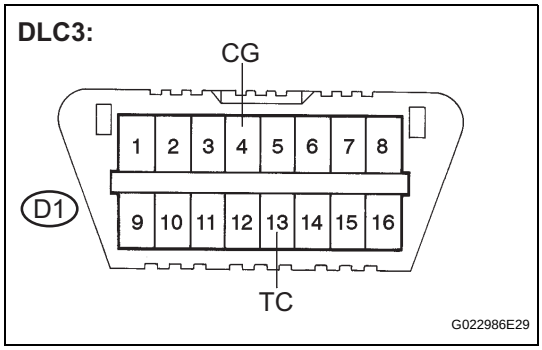

(a) Reconnect the ECM connector.
(b) Using SST, connect terminals TC and CG of the DLC3.
SST 09843-18040
(c) Turn the ignition switch to the ON position.
(d) Check that the check engine warning light is blinking.

Result

Result	Proceed to
Check engine warning light is blinking	A
Check engine warning light is not blinking	B

HINT:
If troubleshooting has been carried out according to the Problem Symptoms Table, refer back to the table and proceed to the next step before replacing the part (See page BC-79).

B → **REPAIR OR REPLACE WIRE HARNESS OR ECM (TC of ECM CIRCUIT)**

A → **REPLACE BRAKE ACTUATOR ASSEMBLY**