DTC	C0210/33	Rear Speed Sensor RH Circuit

DTC	C0215/34	Rear Speed Sensor LH Circuit

DTC	C1238/38	Foreign Object is Attached on Tip of Rear Speed Sensor RH

DTC	C1239/39	Foreign Object is Attached on Tip of Rear Speed Sensor LH

DTC	C1273/73	Low Output Signal of Rear Speed Sensor RH (Test Mode DTC)

DTC	C1274/74	Low Output Signal of Rear Speed Sensor LH (Test Mode DTC)

DTC	C1277/77	Abnormal Change in Output Signal of Rear Speed Sensor RH (Test Mode DTC)

DTC	C1278/78	Abnormal Change in Output Signal of Rear Speed Sensor LH (Test Mode DTC)

DESCRIPTION

Refer to DTCs C0200/31, C0205/32, C1235/35, and C1236/36 (See page BC-17).
DTCs C1273/73 to C1278/78 can be deleted when the speed sensor sends a vehicle speed signal or the Test Mode ends. DTCs C1273/73 to C1278/78 are output only in the Test Mode.

DTC No.	DTC Detection Condition	Trouble Area
C0210/33 C0215/34	With vehicle speed at 10 km/h (6 mph) or more, sensor signal circuit of faulty wheel is open or short for 1 second or more. • Momentary interruption of sensor signal of faulty wheel has occurred 7 times or more. • Sensor signal circuit is open for 0.5 seconds or more.	• Rear speed sensor RH/LH • Rear speed sensor RH/LH circuit • Speed sensor rotor • Sensor installation • Brake actuator assembly
C1238/38 C1239/39	At vehicle speed of 20 km/h (12 mph) or more, condition that noise is included in speed sensor signal continues for 5 seconds or more.	• Rear speed sensor RH/LH • Speed sensor rotor • Sensor installation • Brake actuator assembly

HINT:
- DTC C0210/33 and C1238/38 are for the rear speed sensor RH.
- DTC C0215/34 and C1239/39 are for the rear speed sensor LH.

WIRING DIAGRAM

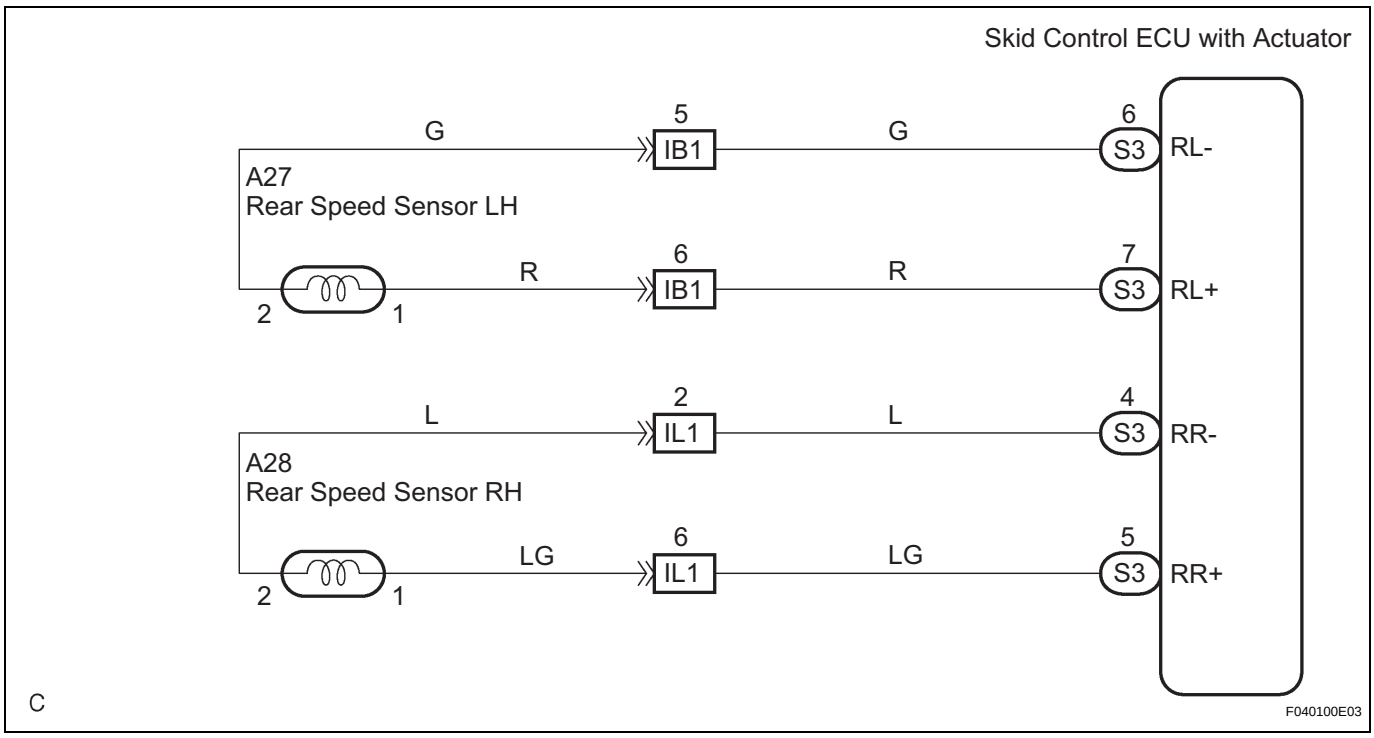

INSPECTION PROCEDURE

HINT:
Start the inspection from step 1 when using the intelligent tester and start from step 3 when not using the intelligent tester.

1	READ VALUE OF INTELLIGENT TESTER (REAR SPEED SENSOR)

(a) Select the DATA LIST mode on the intelligent tester.

ABS:

Item (Display)	Measurement Item / Range (Display)	Normal Condition	Diagnostic Note
WHEEL SPD RR	Wheel speed sensor (RR) reading / min.: 0 km/h (0 mph), max.: 326 km/h (202 mph)	Actual wheel speed	Similar speed as indicated on speedometer
WHEEL SPD RL	Wheel speed sensor (RL) reading / min.: 0 km/h (0 mph), max.: 326 km/h (202 mph)	Actual wheel speed	Similar speed as indicated on speedometer

(b) Check that there is the speed value output from the speed sensor displayed on the intelligent tester and the speed value displayed on the speedometer are almost the same when driving the vehicle.

OK:

The speed value output from the speed sensor displayed on the intelligent tester is the same as the actual vehicle speed.

NG → **Go to step 3**

OK

2	PERFORM TEST MODE INSPECTION (SIGNAL CHECK)

(a) Clear the DTC (See page BC-10).
(b) Perform sensor signal check in TEST MODE PROCEDURE (See page BC-3).
OK:
All Test Mode DTCs are erased.

OK → **Go to step 8**

NG

3	INSPECT REAR SPEED SENSOR INSTALLATION

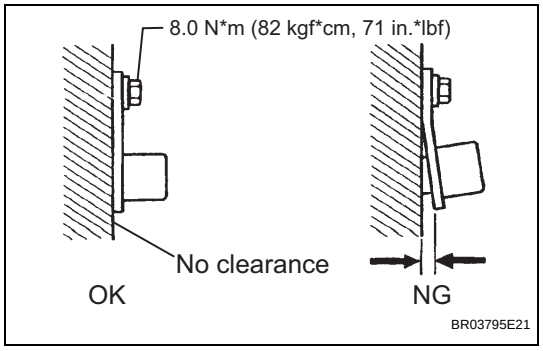

(a) Turn the ignition switch off.
(b) Check the speed sensor installation.
OK:
The installation nut is tightened properly.
There is no clearance between the sensor and the rear axle.
Torque:
8.0 N*m (82 kgf*cm, 71 in.*lbf)
NOTICE:
Check the speed sensor signal after replacement (See page BC-3).

NG → **INSTALL REAR SPEED SENSOR CORRECTLY**

OK

4	INSPECT SPEED SENSOR TIP

(a) Remove the rear speed sensor (See page BC-190).
(b) Check the sensor tip.
OK:
No scratches or foreign matter on the sensor tip.
NOTICE:
Check the speed sensor signal after cleaning or replacement (See page BC-3).

NG → **CLEAN OR REPLACE REAR SPEED SENSOR**

OK

5	**INSPECT HARNESS AND CONNECTOR (BETWEEN REAR SPEED SENSOR AND SKID CONTROL SENSOR WIRE)**

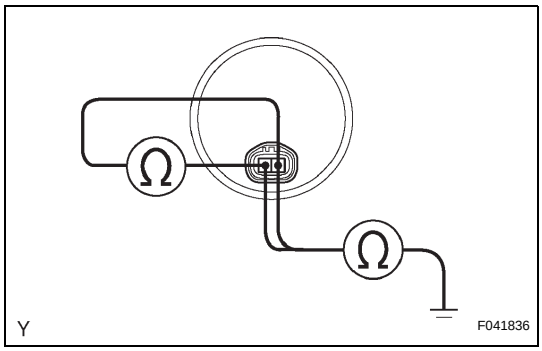

(a) Install the rear speed sensor.
(b) Disconnect the rear speed sensor connector.
(c) Measure the resistance according to the value(s) in the table below.

Standard resistance

RH:

Tester Connection	Specified Condition
2 (RR-) - 1 (RR+)	1.09+-0.2 kΩ at 20°C
2 (RR-) - Body ground	10 kΩ or higher
1 (RR+) - Body ground	10 kΩ or higher

LH:

Tester Connection	Specified Condition
2 (RL-) - 1 (RL+)	1.09+-0.2 kΩ at 20°C
2 (RL-) - Body ground	10 kΩ or higher
1 (RL+) - Body ground	10 kΩ or higher

NOTICE:
Check the speed sensor signal after replacement (See page BC-3).

NG → **REPLACE REAR SPEED SENSOR**

OK

6 CHECK HARNESS AND CONNECTOR (BETWEEN SKID CONTROL ECU AND REAR SPEED SENSOR)

Skid control ECU (Wire Harness Side) Connector Front View:

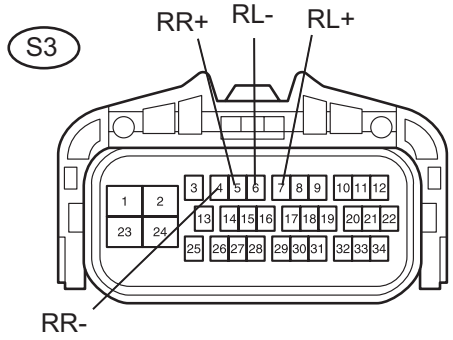

Front Speed Sensor (Wire Harness Side) Connector Front View:

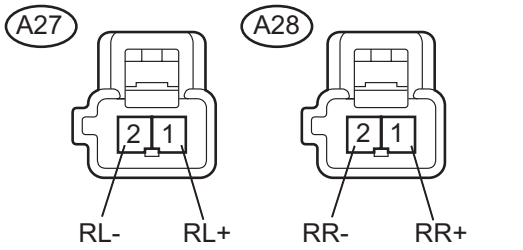

N

C119427E03

(a) Disconnect the skid control ECU connector.
(b) Measure the resistance according to the value(s) in the table below.

Standard resistance

RH:

Tester Connection	Specified Condition
S3-5 (RR+) - A28-1 (RR+)	Below 1 Ω
S3-5 (RR+) - Body ground	10 kΩ or higher
S3-4 (RR-) - A28-2 (RR-)	Below 1 Ω
S3-4 (RR-) - Body ground	10 kΩ or higher

LH:

Tester Connection	Specified Condition
S3-7 (RL+) - A27-1 (RL+)	Below 1 Ω
S3-7 (RL+) - Body ground	10 kΩ or higher
S3-6 (RL-) - A27-2 (RL-)	Below 1 Ω
S3-6 (RL-) - Body ground	10 kΩ or higher

NG → **REPAIR OR REPLACE HARNESS OR CONNECTOR**

OK

7 INSPECT SPEED SENSOR AND SENSOR ROTOR SERRATIONS

Normal Signal Waveform:

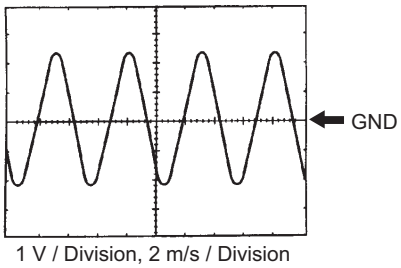

W004200E03

(a) Connect the oscilloscope to terminals FR+ - FR- or FL+ - FL- of the skid control ECU.
(b) Drive the vehicle at about 30 km/h (19 mph), and check the signal waveform.

OK:

A waveform as shown in the figure should be output.

HINT:

- As vehicle speed (wheel rotation speed) increases, the width of the waveform narrows and the fluctuation in the output voltage becomes greater.
- When noise is identified in the waveform on the oscilloscope, error signals are generated due to rotor scratches, looseness or foreign matter attached to the speed sensor.

NG → **Go to step 9**

BC

OK

8	RECONFIRM DTC

(a) Clear the DTCs (See page BC-10).
(b) Drive the vehicle at a speed of approximately 32 km/h (20 mph) or more for 60 seconds or more.
(c) Check that the same DTCs are recorded (See page BC-10).
HINT:
Reinstall the sensors, connectors, etc. and restore the vehicle to its prior condition before rechecking for DTCs.

Result

Condition	Proceed to
DTCs (C0210/33, C0215/34, C1238/38 and C1239/39) are output	A
DTCs (C0210/33, C0215/34, C1238/38 and C1239/39) are not output (When troubleshooting in accordance with the DTC CHART)	B
DTCs (C0210/33, C0215/34, C1238/38 and C1239/39) are not output (When troubleshooting in accordance with the PROBLEM SYMPTOMS TABLE)	C

B → **END**

C → **PROCEED TO NEXT CIRCUIT INSPECTION SHOWN IN PROBLEM SYMPTOMS TABLE**

A

9	INSPECT SPEED SENSOR ROTOR

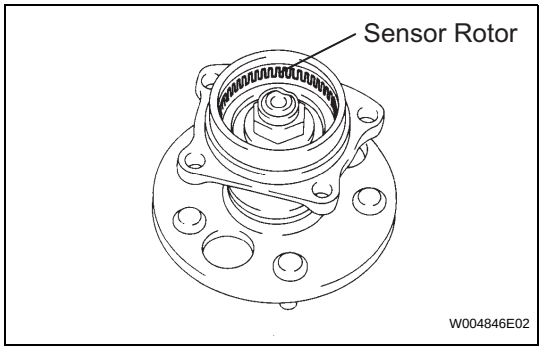

(a) Turn the ignition switch off.
(b) Remove the rear axle hub and bearing (See page AH-16).
(c) Check the rotor.
OK:
No scratches, oil, or foreign matter on the rotors.
NOTICE:
Check the speed sensor signal after cleaning or replacement (See page BC-3).

NG → **CLEAN OR REPLACE REAR AXLE HUB AND BEARING ASSEMBLY**

OK

REPLACE BRAKE ACTUATOR ASSEMBLY