REMOVAL

1. DRAIN BRAKE FLUID
NOTICE:
Wash brake fluid off immediately if it adheres to any painted surface.

2. DISCONNECT BATTERY NEGATIVE TERMINAL

3. REMOVE AIR CLEANER ASSEMBLY WITH HOSE

4. REMOVE BRAKE ACTUATOR WITH BRACKET

(a) Release the latch of the brake actuator connector to disconnect the connector

(b) Using SST, disconnect the 6 brake tubes from the actuator with bracket.
SST 09023-00101

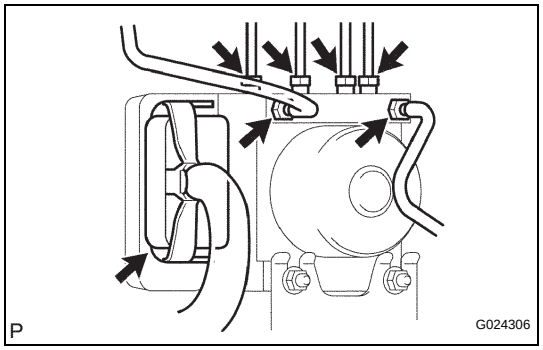

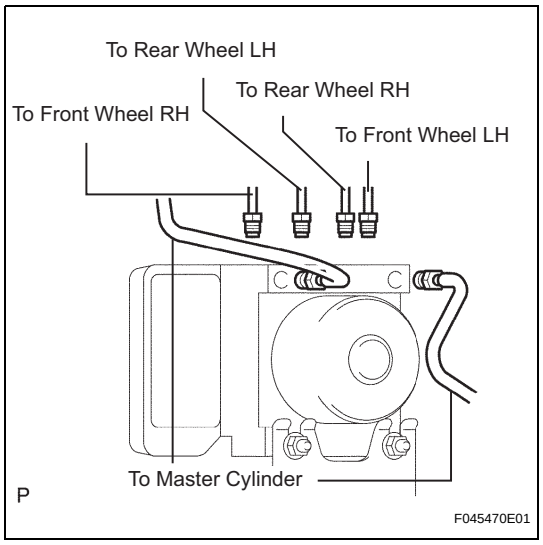

(c) Use tags or make a memo to identify the places to reconnect.

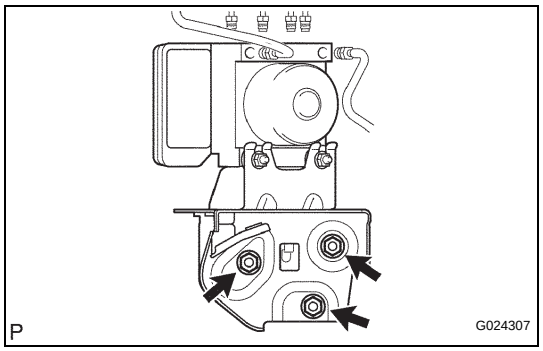

(d) Remove the 3 bolts and the actuator with bracket.
NOTICE:
Be careful not to damage the brake tubes and wire harness.

5. REMOVE BRAKE ACTUATOR

(a) Remove the 2 nuts and the brake actuator assembly from the brake actuator bracket.

INSTALLATION

1. INSTALL BRAKE ACTUATOR

(a) Install the brake actuator assembly with the 2 nuts.
Torque: 5.4 N*m (55 kgf*cm, 48 in.*lbf)

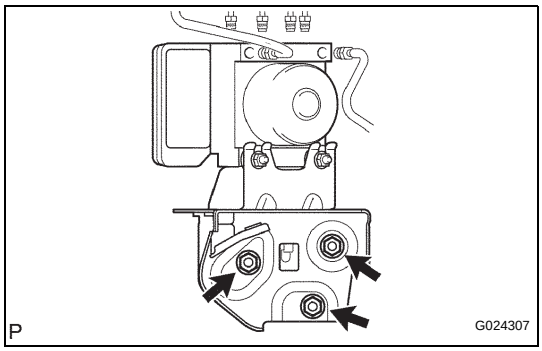

2. INSTALL BRAKE ACTUATOR WITH BRACKET

(a) Install the actuator with bracket with the 3 bolts.
Torque: 20 N*m (199 kgf*cm, 14 ft.*lbf)
NOTICE:
Be careful not to damage the brake tubes and wire harness.

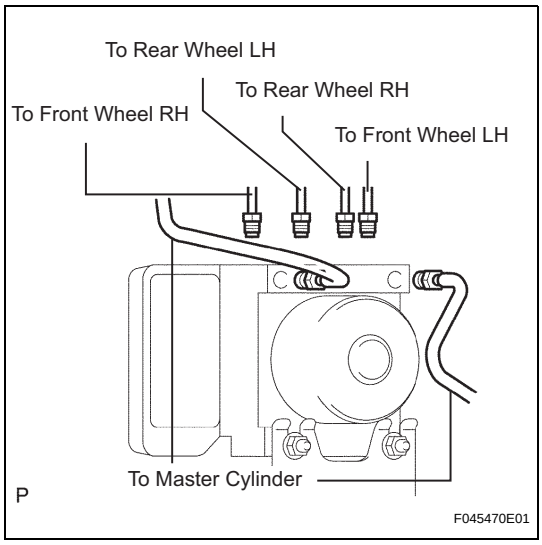

(b) Using SST, connect each brake tube to correct positions of the actuator with bracket, as shown in the illustration.
Torque: 15 N*m (155 kgf*cm, 11 ft.*lbf)

(c) Connect the brake actuator connector assembly.

3. INSTALL AIR CLEANER ASSEMBLY WITH HOSE

4. FILL RESERVOIR WITH BRAKE FLUID (See page BR-3)

5. BLEED BRAKE MASTER CYLINDER SUB-ASSEMBLY (See page BR-3)

6. BLEED BRAKE LINE (See page BR-4)

7. CHECK BRAKE FLUID LEAKAGE

8. CHECK FLUID LEVEL IN RESERVOIR (See page BR-7)

9. CONNECT BATTERY NEGATIVE TERMINAL

10. PERFORM INITIALIZATION

11. CHECK BRAKE ACTUATOR WITH INTELLIGENT TESTER

HINT:
See page BC-183.