INSPECTION

1. INSPECT FRONT SPEED SENSOR

(a) Make sure that there is no looseness at the connector lock part and connecting part of the connector.

(b) Disconnect the speed sensor connector.

(c) Measure the resistance between terminals 1 and 2 of the speed sensor connector.

OK:

Resistance:

0.92 to 1.22 kΩ

(d) Measure the resistance between terminals 1 and 2 of the speed sensor connector and body ground.

OK:

Resistance:

1MΩ or higher

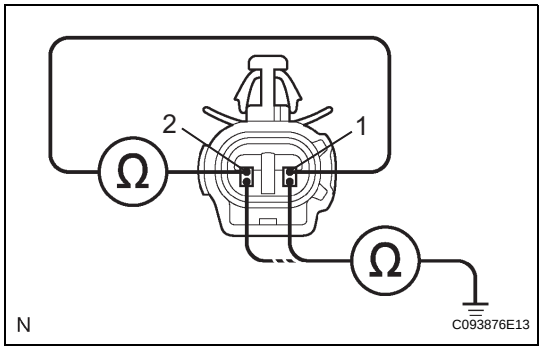

INSTALLATION

HINT:
Install the RH side by the same procedures with LH side.

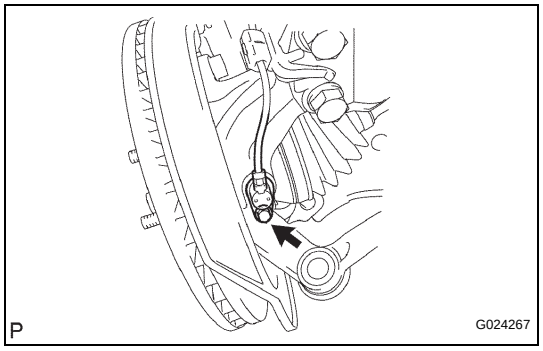

1. INSTALL FRONT SPEED SENSOR LH

(a) Install the speed sensor front LH with the bolt.
Torque: 8.0 N*m (82 kgf*cm, 71 in.*lbf)
NOTICE:
Keep the tip of the front speed sensor LH.

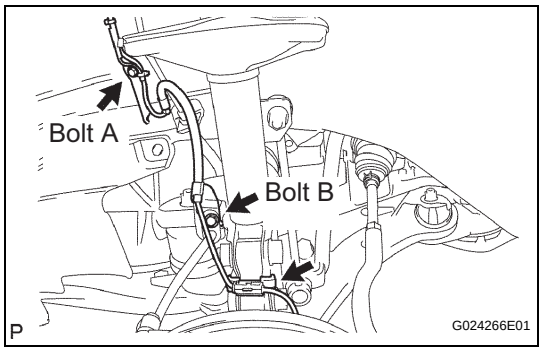

(b) Install the sensor harness clamps with the 2 bolts A and B to the body and shock absorber.
Torque: Bolt A
8.0 N*m (82 kgf*cm, 71 in.*lbf)
Bolt B
19 N*m (192 kgf*cm, 14 ft.*lbf)
NOTICE:
Do not twist the sensor wire when installing the sensor.

(c) Connect the clamp to the knuckle.

(d) Install the sensor harness and clamp to the body.

(e) Connect the speed sensor connector.

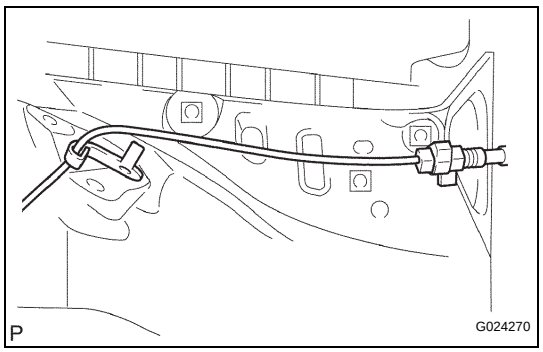

2. INSTALL FRONT FENDER LINER LH

3. REMOVE FRONT WHEEL
Torque: 103 N*m (1,050 kgf*cm, 76 ft.*lbf)

4. CHECK ABS SPEED SENSOR SIGNAL
HINT:
See page BC-3