DTC	C0226/21	SFR Solenoid Circuit

DTC	C0236/22	SFL Solenoid Circuit

DTC	C0246/23	SRR Solenoid Circuit

DTC	C0256/24	SRL Solenoid Circuit

DESCRIPTION

The solenoid comes on when signals are received from the ECU and controls the pressure acting on the wheel cylinders, thus controlling brake force.

DTC No.	DTC Detection Condition	Trouble Area
C0226/21	When either of the following is detected: • With IG1 terminal voltage at 10 V to 16 V, solenoid circuit is an open or short for 0.05 seconds or more. • With IG1 terminal voltage at 10 V to 16 V, during ABS control solenoid relay contact is off for 0.05 seconds or more.	• SFRH or SFRR circuit • Brake actuator assembly
C0236/22		• SFLH or SFLR circuit • Brake actuator assembly
C0246/23		• SRRH or SRRR circuit • Brake actuator assembly
C0256/24		• SRLH or SRLR circuit • Brake actuator assembly

WIRING DIAGRAM

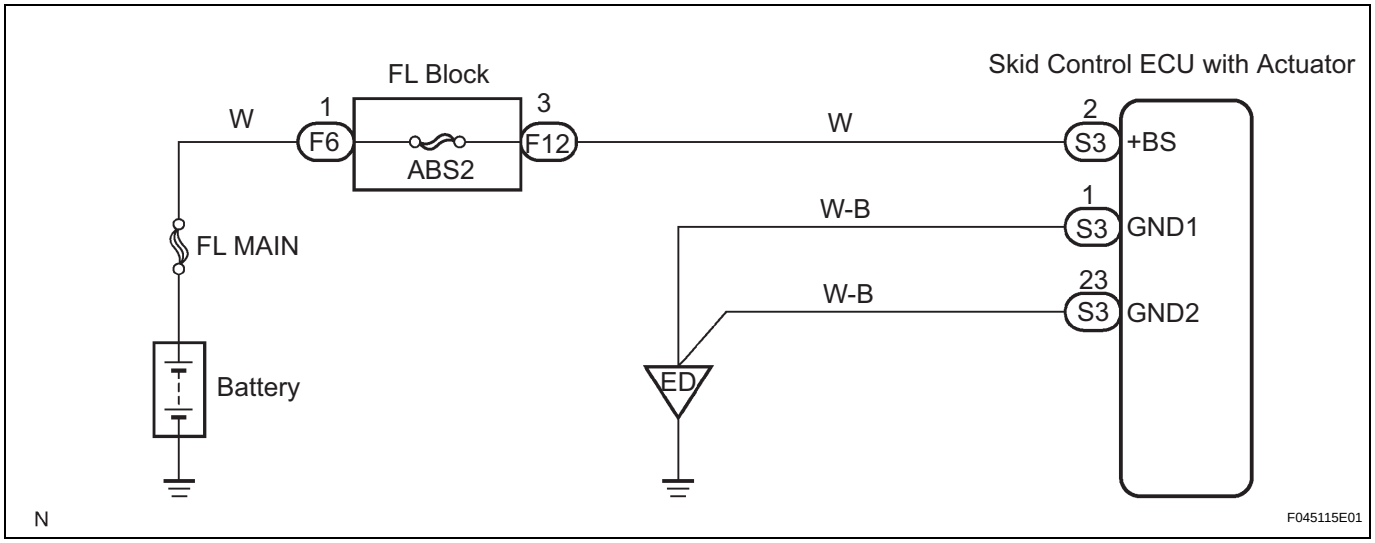

INSPECTION PROCEDURE

1	RECONFIRM DTC

HINT:
These codes are detected when a problem is identified in the brake actuator.
The solenoid circuit is in the brake actuator.
Therefore, solenoid circuit inspection and solenoid unit inspection cannot be performed. Be sure to check if any DTC is output before replacing the brake actuator assembly.

(a) Clear the DTCs (See page BC-10).
(b) Start the engine.
(c) Drive the vehicle at the speed of 4 mph (6 km/h) or more.
(d) Check that the same DTCs are recorded (See page BC-10).

HINT:
If a speed signal of 4 mph (6 km/h) or more is input to the skid control ECU, with the ignition switch on and the stop light switch off, the ECU performs self-diagnosis of the motor and solenoid circuits.

Result

Condition	Proceed to
DTCs (C0226/21, C0236/22, C0246/23 and C0256/24) are output	A
DTCs (C0226/21, C0236/22, C0246/23 and C0256/24) are not output	B

HINT:
- If any DTCs are output while jiggling a connector or wire harness of the brake actuator (skid control ECU), inspect and repair the connector or wire harness.
- If the normal system code is output, slightly jiggle the connectors, wire harnesses, and fuses of the brake actuator assembly. Make sure that no DTCs are output.
- These DTCs may be stored due to a malfunction in the connector terminal connection, etc.

B → END

A → **REPLACE BRAKE ACTUATOR ASSEMBLY**