# REAR SPEED SENSOR (for 4WD)

## COMPONENTS

**4WD:**

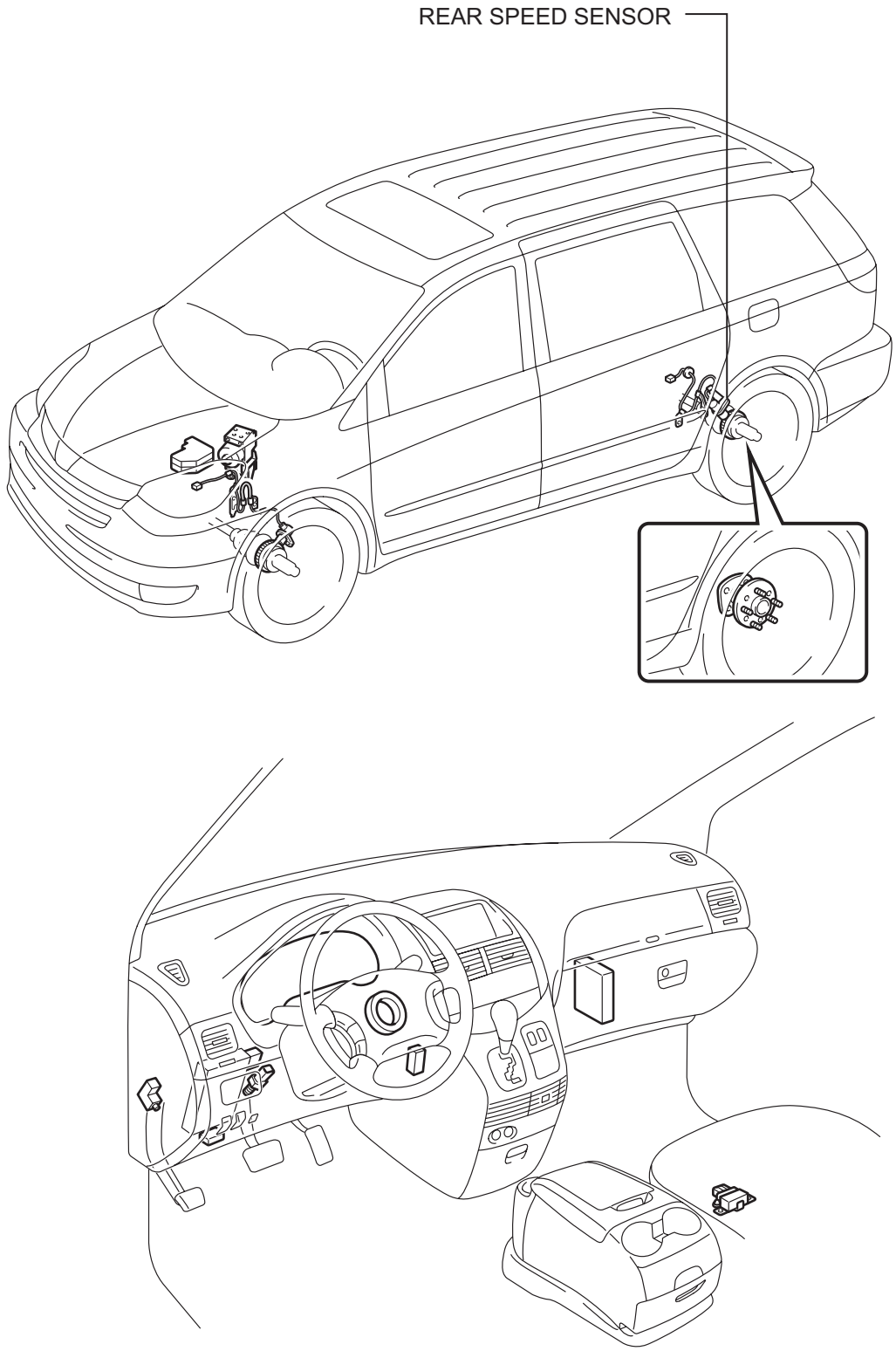


N

C119321E12

# REMOVAL

HINT:
Remove the RH side by the same procedure as the LH side.

1. **REMOVE REAR WHEEL**

2. **REMOVE QUARTER TRIM PANEL ASSEMBLY FRONT LH**
   HINT:
   Remove the LH side by the same procedure as the RH side (See page IR-9).

3. **REMOVE REAR SPEED SENSOR**
   (a) Disconnect the speed sensor connector, and pull out the sensor wire harness with grommet.

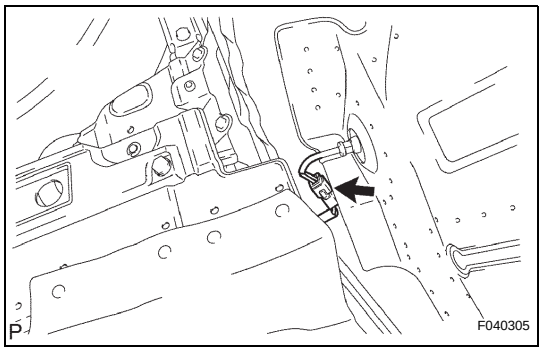


   (b) Remove the clamp bolt holding the sensor harness from the body.

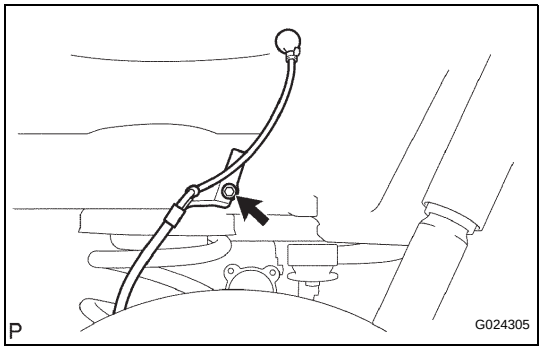


   (c) Remove the bolt and speed sensor rear LH.
   **NOTICE:**
   **Keep the tip of the speed sensor rear LH clean.**

