STEERING ANGLE SENSOR

COMPONENTS

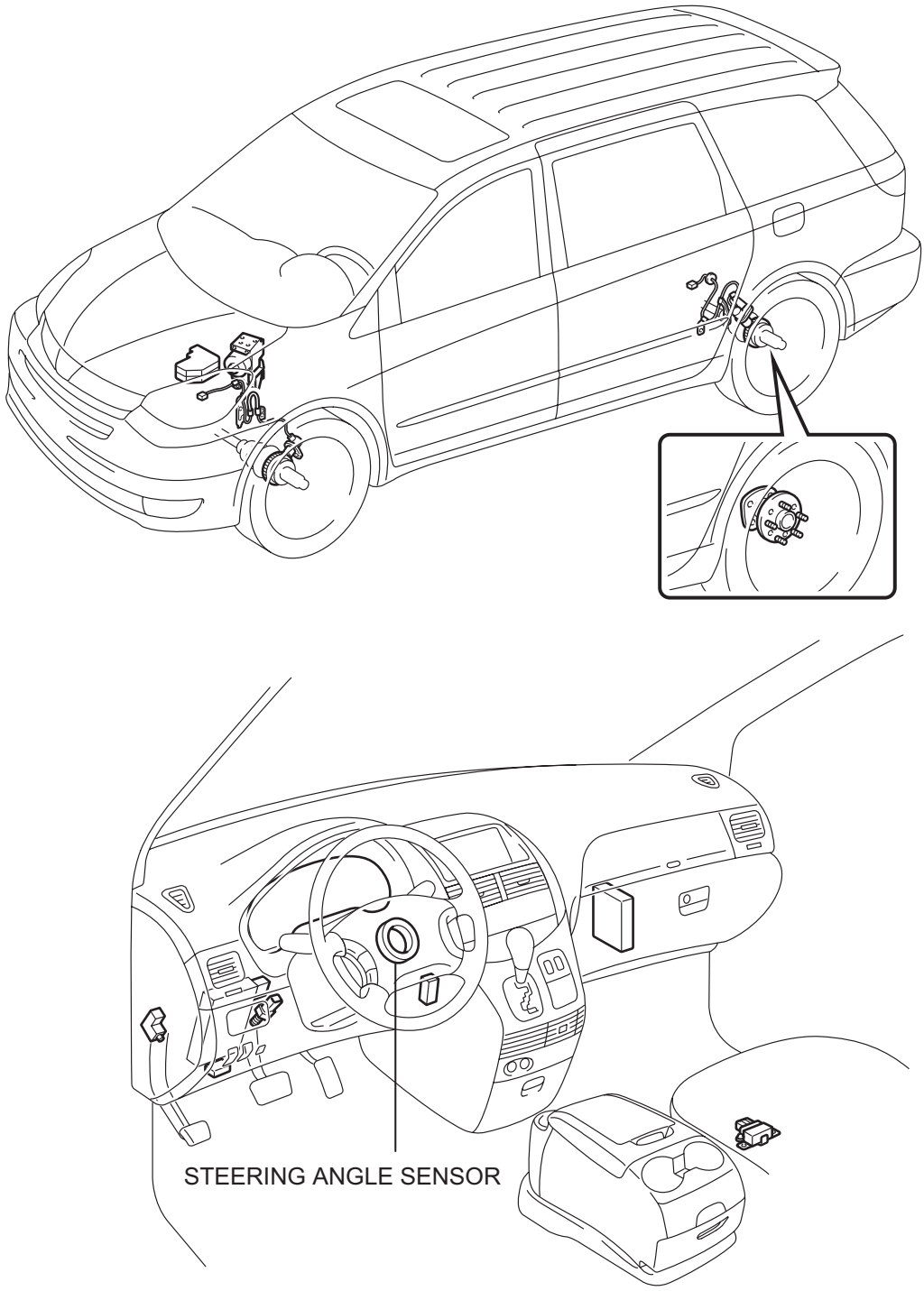

N

C119321E14

REMOVAL

1. **PRECAUTION**
   HINT:
   See page RS-1
2. **SEPARATE BATTERY NEGATIVE TERMINAL**
3. **PLACE FRONT WHEELS FACING STRAIGHT AHEAD**
4. **REMOVE HORN BUTTON ASSEMBLY (See page RS-424)**
5. **REMOVE STEERING WHEEL ASSEMBLY (See page SR-6)**
6. **REMOVE STEERING COLUMN COVER LWR (See page RS-434)**
7. **REMOVE SPIRAL CABLE SUB-ASSEMBLY (See page RS-434)**
8. **REMOVE STEERING ANGLE SENSOR**
   (a) Release the claw fittings and remove the steering sensor from the spiral cable.

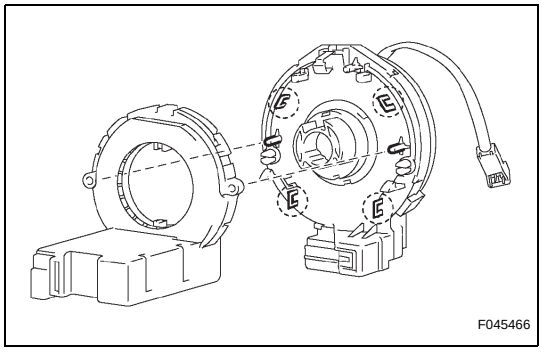

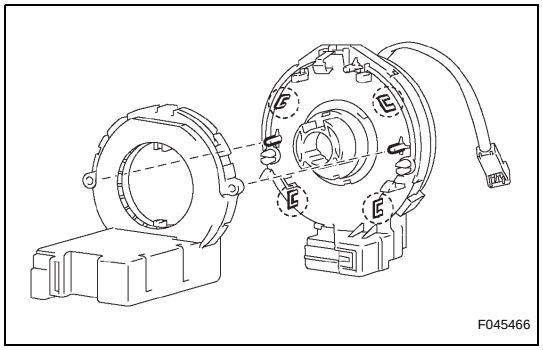

INSTALLATION

1. **INSTALL STEERING ANGLE SENSOR**
   (a) Install the steering sensor onto the spiral cable.
2. **PLACE FRONT WHEELS FACING STRAIGHT AHEAD**
3. **INSTALL SPIRAL CABLE SUB-ASSEMBLY (See page RS-434)**
4. **INSTALL STEERING COLUMN COVER LWR (See page RS-435)**
5. **CENTER SPIRAL CABLE (See page RS-435)**
6. **INSTALL STEERING WHEEL ASSEMBLY**
7. **INSPECT STEERING WHEEL CENTER POINT (See page SR-11)**
8. **INSTALL HORN BUTTON ASSEMBLY (See page RS-424)**
9. **INSPECT SRS WARNING LIGHT**
   HINT:
   See page RS-1.