INSPECTION

1. INSPECT BRAKE CYLINDER AND PISTON

(a) Check the brake cylinder bore and rear disc brake piston for rust or scoring.

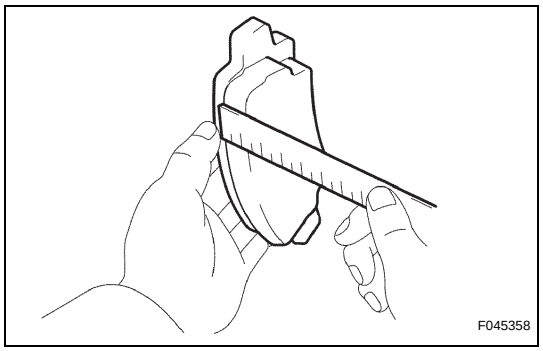

2. INSPECT PAD LINING THICKNESS

(a) Using a ruler, measure the pad lining thickness.

Standard thickness:
11.0mm (0.433 in.)
Minimum thickness:
1.0 mm (0.039 in.)

3. INSPECT REAR DISC BRAKE PAD SUPPORT PLATE

(a) Inspect the rear brake disc pad support plate (No. 1) and rear brake disc pad support plate (No. 2). Make sure that they have sufficient rebound, no deformation, cracks or wear, and have had all rust and dirt cleaned off.

4. INSPECT DISC THICKNESS

(a) Using a micrometer, measure the disc thickness.

Standard thickness:
12.0mm (0.472 in.)
Minimum thickness:
10.5 mm (0.413 in.)

REASSEMBLY

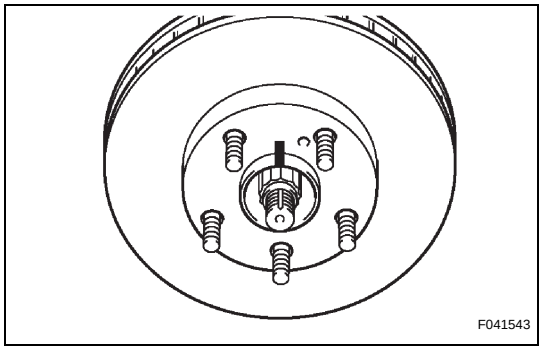

1. INSTALL REAR DISC

(a) Aligning the matchmarks, install the rear disc.
HINT:
Select the installation position where the disc has the minimum runout.

2. INSPECT DISC RUNOUT

(a) Temporarily fasten the disc with the hub nuts.
Torque: 103 N*m (1,050 kgf*cm, 76 ft.*lbf)

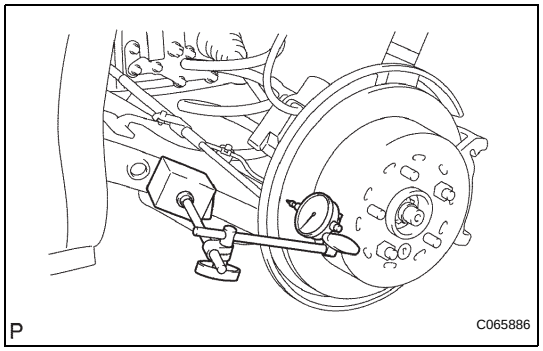

(b) Using a dial indicator, measure the disc runout 10 mm (0.39 in.) away from the outer edge of the disc.

Maximum disc runout:
0.10 mm (0.0039 in.)

(c) If the disc runout is the maximum value or greater, check the bearing play in the axial direction and check for the axle hub runout (See page AH-16). If the bearing play and axle hub runout are normal, adjust the disc runout or grind it on a "On-car" brake lathe.

3. ADJUST PARKING BRAKE SHOE CLEARANCE

4. TEMPORARILY TIGHTEN REAR DISC BRAKE BLEEDER PLUG

(a) Temporarily install the rear disc brake bleeder plug to the disc brake cylinder assembly rear LH.

5. INSTALL REAR DISC BRAKE BLEEDER PLUG CAP

6. INSTALL PISTON SEAL

(a) Apply lithium soap base glycol grease to a new piston seal.

(b) Install the piston seal to the disc brake cylinder assembly rear LH.

7. INSTALL REAR DISC BRAKE PISTON

(a) Apply lithium soap base glycol grease to the rear disc brake piston and new cylinder boot.

(b) Install the cylinder boot to the rear disc brake piston.

(c) Install the rear disc brake piston to the disc brake cylinder assembly rear LH.

NOTICE:
Do not install the piston forcibly in the disc brake cylinder.

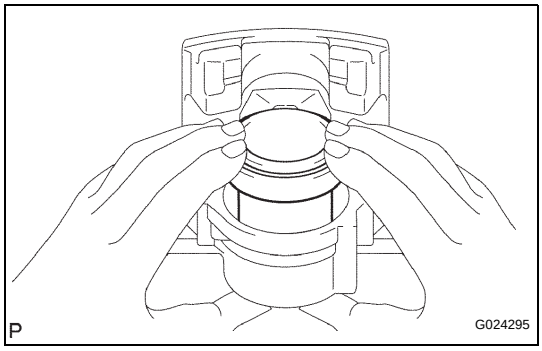

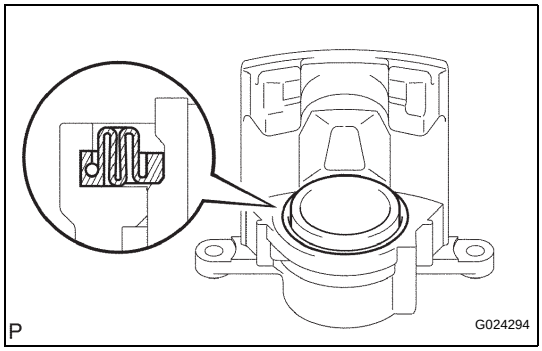

8. INSTALL CYLINDER BOOT

(a) Install a new cylinder boot to the rear disc brake cylinder sub-assembly.

NOTICE:
Install the boot securely to the grooves of the cylinder and piston.

(b) Using a screwdriver, install the set ring.

NOTICE:
Do not damage the cylinder boot.

9. INSTALL REAR DISC BRAKE BUSH DUST BOOT

(a) Install the 2 rear disc brake bush dust boot to the disc brake cylinder mounting LH.

10. INSTALL REAR DISC BRAKE CYLINDER SLIDE PIN

(a) Apply the lithium soap base glycol grease to the sealing surface of the 2 rear disc brake cylinder slide pins.