(d) Using needle-nose pliers, disconnect the parking brake cable No. 3 from the parking brake shoe lever and remove the parking brake shoe assembly LH No. 2.

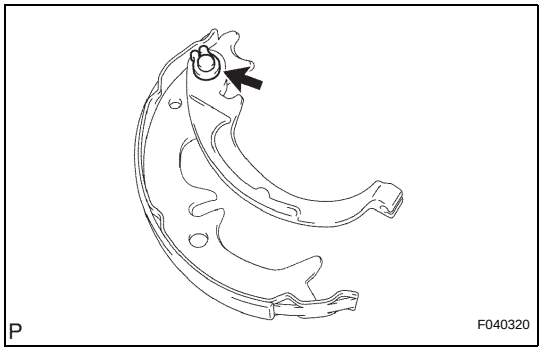

8. REMOVE PARKING BRAKE SHOE LEVER LH

(a) Using a screwdriver, remove the C-washer.

(b) Remove the shim and shoe lever from the parking brake shoe.

INSPECTION

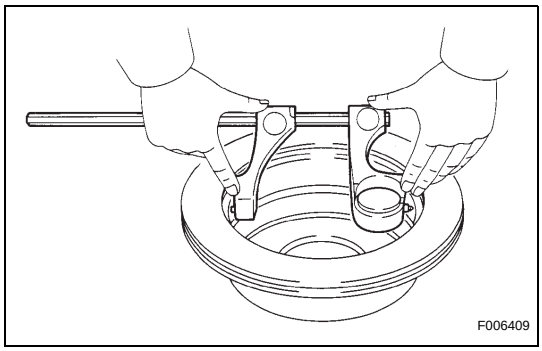

1. INSPECT BRAKE DISC INSIDE DIAMETER

(a) Using a brake drum gauge or equivalent, measure the inside diameter of the disc.

Standard inside diameter:
190 mm (7.480 in.)
Maximum inside diameter:
191 mm (7.520 in.)

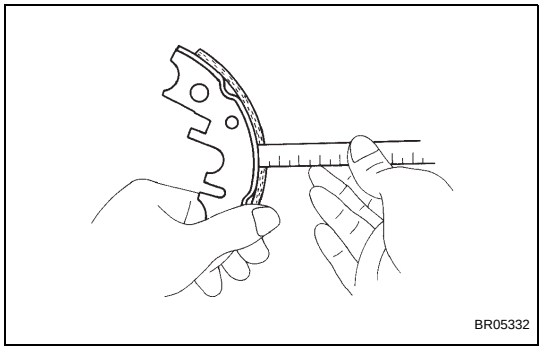

2. INSPECT PARKING BRAKE SHOE LINING THICKNESS

(a) Using a ruler, measure the thickness of the shoe lining.

Standard thickness:
2.5 mm (0.098 in.)
Minimum thickness:
1.0 mm (0.039 in.)

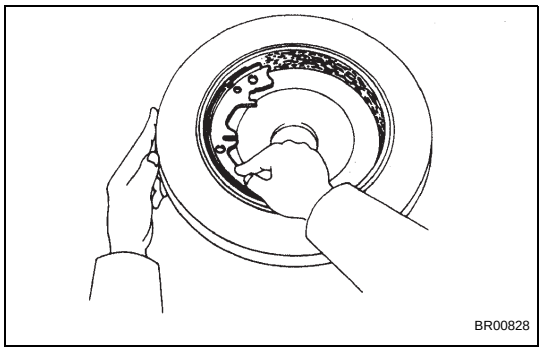

3. INSPECT BRAKE DISC AND PARKING BRAKE SHOE LINING FOR PROPER CONTACT

(a) Apply chalk to the inside surface of the disc, then grind down the brake shoe lining to fit.
If the contact between the brake disc and the shoe lining is improper, repair it using a brake shoe grinder or replace the brake shoe assembly.

REASSEMBLY

1. APPLY HIGH TEMPERATURE GREASE

(a) Apply the high temperature grease to the surface on which the shoe and backing plate attach.

2. INSTALL PARKING BRAKE SHOE LEVER LH

(a) Install the shoe lever and shim to the rear shoe with a new C-washer.

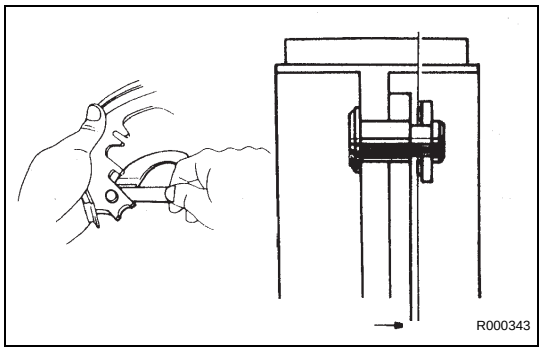

(b) Using a feeler gauge, measure the clearance.
Standard clearance:
Less than 0.35 mm (0.0138 in.)
If the clearance is not within the specification, replace the shim with one of the correct size.

Shim Thickness	Shim Thickness
0.3 mm (0.012 in.)	0.9 mm (0.035 in.)
0.6 mm (0.024 in.)	-

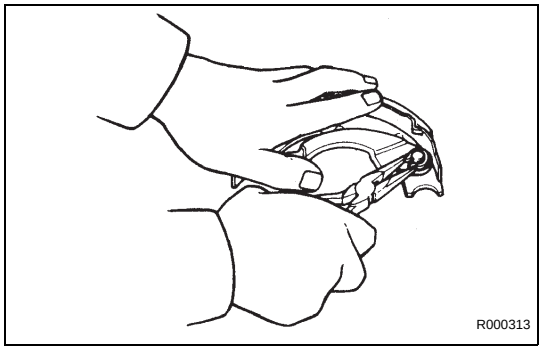

(c) Install the correct side shim with a new C-washer.
(d) Remeasure the clearance.

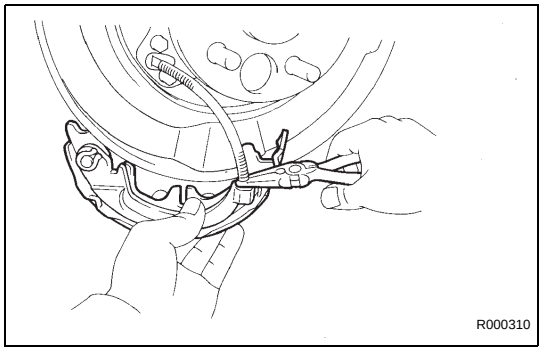

3. INSTALL PARKING BRAKE SHOE ASSEMBLY LH NO.2

(a) Using needle-nose pliers, connect the parking brake cable No. 3 to the parking brake shoe lever.
(b) Install the parking brake shoe assembly LH No. 2 with the shoe hold-down compression spring pin No. 2, shoe hold-down compression spring and 2 cups.

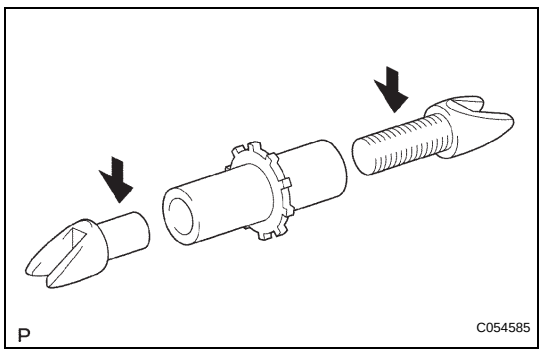

4. INSTALL PARKING BRAKE SHOE ADJUSTING SCREW SET

(a) Apply the high temperature grease to the adjusting bolt.
(b) Install the parking brake shoe adjusting screw set LH.

5. INSTALL PARKING BRAKE SHOE STRUT LH

6. INSTALL PARKING BRAKE SHOE ASSEMBLY LH NO.1

(a) Install the parking brake shoe assembly LH No. 1 with the shoe hold-down compression spring pin No. 1, shoe hold-down compression spring and 2 cups.

(b) Install the tension spring and 2 shoe return tension springs.

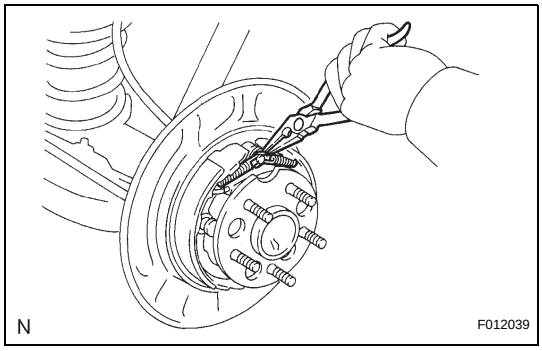

7. CHECK PARKING BRAKE INSTALLATION

(a) Check that each part is installed properly.

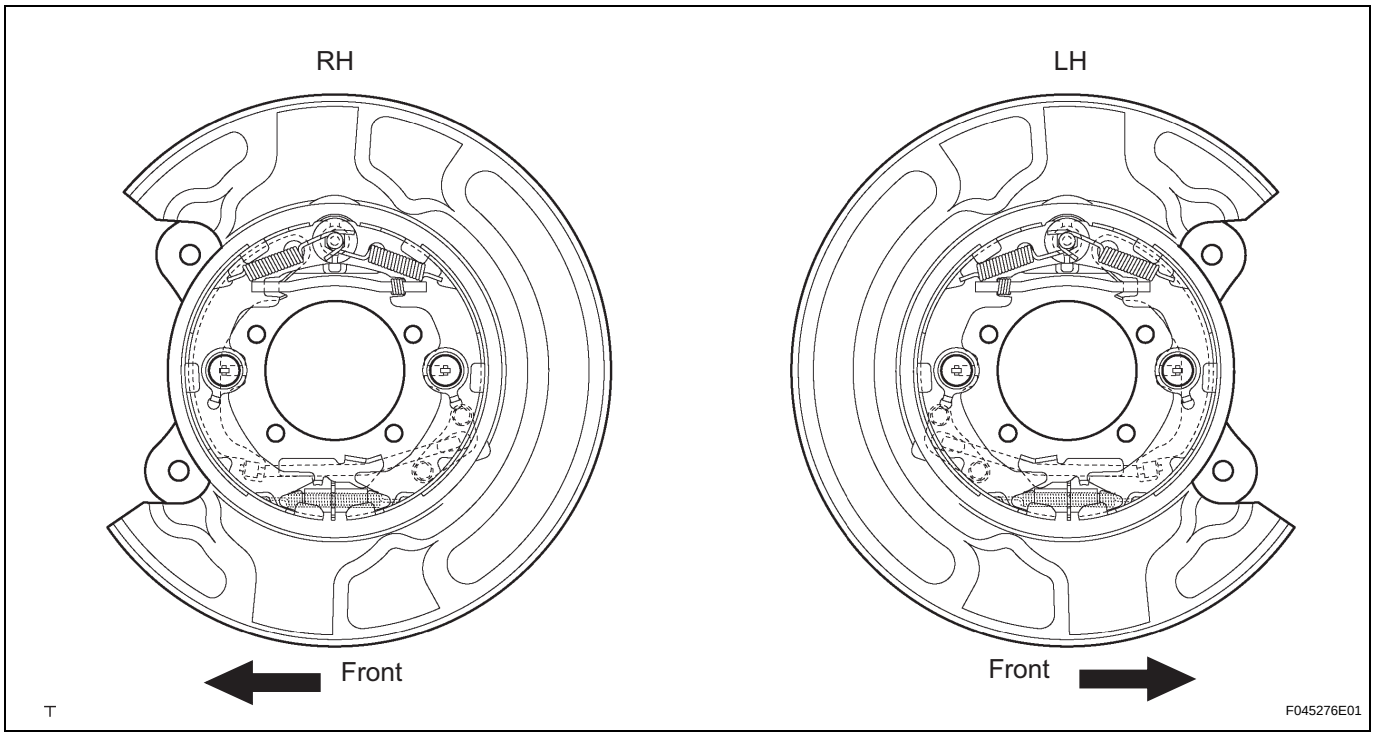

NOTICE:
No oil or grease should be adhered to the friction surface of the shoe lining and disc.

8. INSTALL REAR DISC

9. ADJUST PARKING BRAKE SHOE CLEARANCE

(a) Temporarily install the hub nuts.

(b) Remove the hole plug, and turn the adjuster and expand the shoes until the disc locks.

(c) Contract the shoe adjuster until the disc can rotate smoothly.

Standard:

Return 8 notches

(d) Check that the brake disc rotates smoothly.

(e) Install the hole plug.

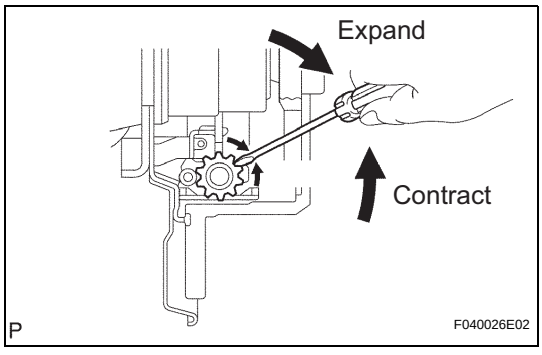

10. **CONNECT REAR DISC BRAKE CALIPER ASSEMBLY LH**
11. **INSTALL REAR WHEEL**
    Torque: 103 N*m (1,050 kgf*cm, 76 ft.*lbf)
12. **INSPECT PARKING BRAKE PEDAL TRAVEL (See page PB-1)**
13. **ADJUST PARKING BRAKE PEDAL TRAVEL (See page PB-1)**