STEERING SYSTEM

PRECAUTION

1. HANDLING PRECAUTIONS ON STEERING SYSTEM

(a) Be careful to replace the parts properly because they could affect the performance of the steering system and result in a driving hazard.

2. HANDLING PRECAUTIONS ON SRS AIRBAG SYSTEM

(a) The SIENNA is equipped with SRS (Supplemental Restraint System) such as the driver airbag and front passenger airbag. Failure to carry out service operation in correct sequence could cause the SRS to unexpectedly deploy during servicing, possibly leading to a serious accident. Before servicing (including removal or installation of parts, inspection or replacement), be sure to read the precautionary notice for the supplemental restraint system (See page RS-1).

SR

PROBLEM SYMPTOMS TABLE

HINT:
Use the table below to help determine the cause of the problem. Likely causes of the problem are indicated in descending order. Check each suspected area in order. Repair or replace the faulty parts or perform adjustments as necessary.

STEERING SYSTEM

Symptom	Suspected Area	See page
Hard steering	Tires (Improperly inflated)	TW-2
	Power steering fluid level (Low)	PS-2
	Drive belt (Loose)	-
	Front wheel alignment (Incorrect)	SP-4
	Steering system joints (Worn)	-
	Suspension arm ball joints (Worn)	SP-24
	Steering column (Binding)	SR-6
	Power steering vane pump	PS-9
	Power steering gear	PS-24
Poor return	Tires (Improperly inflated)	TW-2
	Front wheel alignment (Incorrect)	SP-4
	Steering column (Binding)	-
	Power steering gear	PS-24
Excessive play	Steering system joints (Worn)	-
	Suspension arm ball joints (Worn)	SP-24
	Intermediate shaft, Sliding yoke (Worn)	-
	Front wheel bearing (Worn)	AH-5
	Power steering gear	PS-24
Abnormal noise	Power steering fluid level (Low)	PS-2
	Steering system joints (Worn)	-
	Power steering vane pump	PS-9
	Power steering gear	PS-24

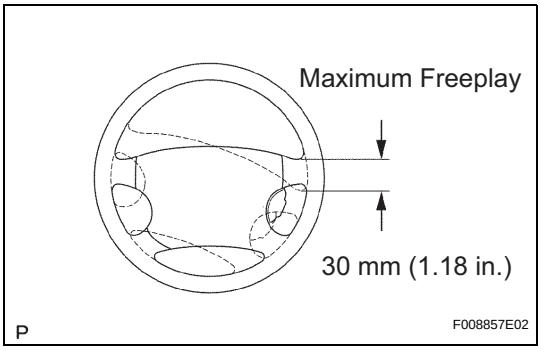

ON-VEHICLE INSPECTION

1. CHECK STEERING WHEEL FREEPLAY

(a) Stop the vehicle and face the tires straight ahead.

(b) Rock the steering wheel gently up and down with your hand, check the steering wheel freeplay.

Maximum freeplay:
30 mm (1.18 in.)