SR

REASSEMBLY

1. INSTALL IGNITION OR STARTER SWITCH ASSEMBLY

(a) Install the ignition or starter switch assembly to the steering column bracket assembly UPR with the 2 screws.

2. INSTALL KEY INTER LOCK SOLENOID

(a) Install the solenoid to the steering column bracket assembly with the 2 screws.

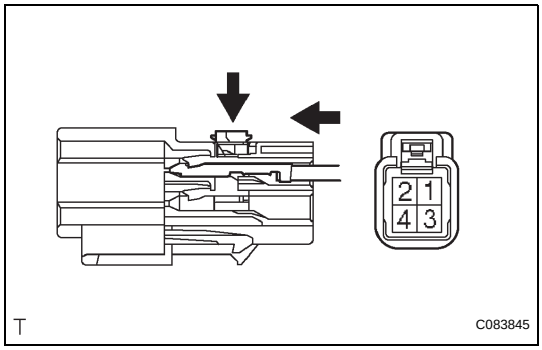

3. INSTALL UN-LOCK WARNING SWITCH ASSEMBLY

(a) Install the un-lock warning switch assembly.
(b) Connect terminals 1 and 2 of the un-lock warning switch assembly connector.
(c) Connect the un-lock warning switch assembly connector to the ignition or starter switch assembly.

4. INSTALL IGNITION SWITCH LOCK CYLINDER ASSEMBLY

(a) Make sure that the ignition switch lock cylinder assembly is in the ACC position.
(b) Install the ignition switch lock cylinder assembly.

5. INSTALL STEERING LOCK OPERATION

(a) Check that the steering lock mechanism is activated when removing the key.
(b) Check that the steering lock mechanism is deactivated when inserting the key and turning it to the ACC position.

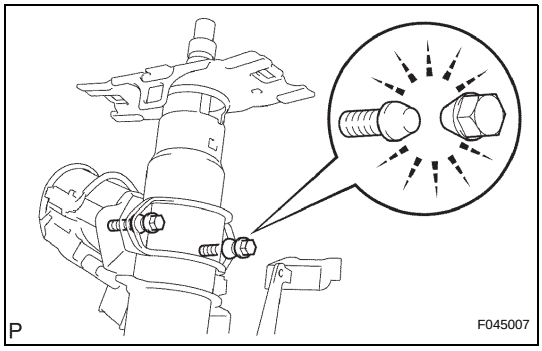

6. INSTALL STEERING COLUMN BRACKET ASSEMBLY UPPER

(a) Temporarily install the steering column upper w/ switch bracket assembly and steering column upper clamp with 2 new tapered-head bolts.
(b) Tighten the 2 tapered-head bolts until the bolt heads break off.

7. INSTALL KEY CYLINDER LIGHT ASSEMBLY (w/o Engine Immobiliser System)

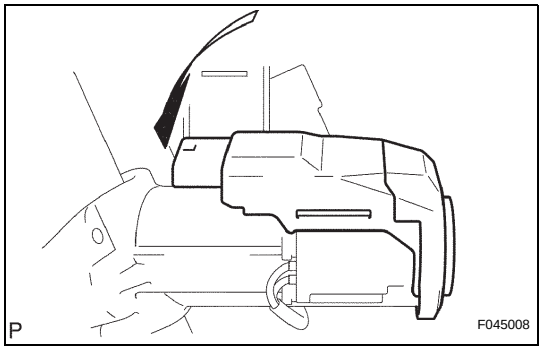

8. INSTALL TRANSPONDER KEY AMPLIFIER (w/ Engine Immobiliser System)

(a) Align the transponder key amplifier with the installation position of the upper bracket with the amplifier inclined.
(b) Push the transponder key amplifier up and connect it to the upper bracket.

NOTICE:
Take care not to push the amplifier up with excessive force to prevent it from being damaged.

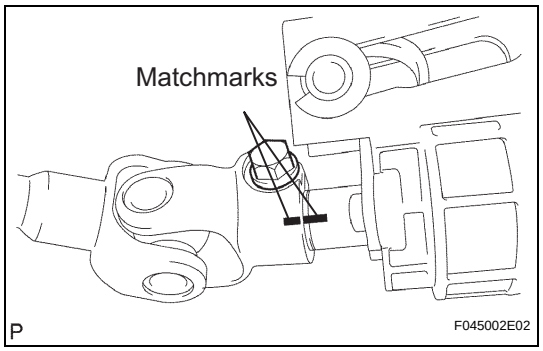

9. **INSTALL STEERING INTERMEDIATE SHAFT ASSEMBLY**
   (a) Align the matchmarks on the steering intermediate shaft assembly and main shaft.
   (b) Temporarily install the steering intermediate shaft assembly with the bolt.
   Torque: 36 N*m (370 kgf*cm, 27 ft.*lbf)

SR

INSTALLATION

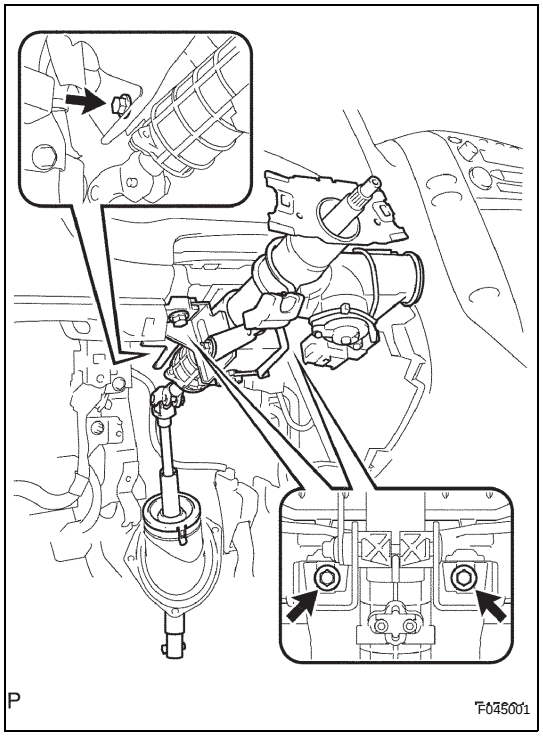

1. **INSTALL STEERING COLUMN ASSEMBLY**
   (a) Install the steering column assembly with the 3 bolts.
   Torque: 25 N*m (255 kgf*cm, 18 ft.*lbf)
   (b) Connect the connectors.
   (c) Connect the wire harness clamps to the steering column tube.

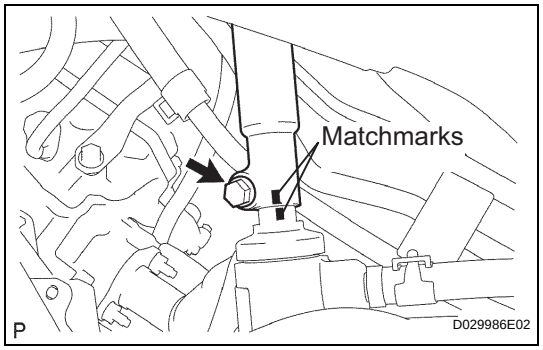

2. **CONNECT STEERING INTERMEDIATE SHAFT ASSEMBLY**
   (a) Align the matchmarks on the intermediate shaft assembly and steering gear assembly.
   (b) Install the steering intermediate shaft assembly with the bolt.
   Torque: 36 N*m (370 kgf*cm, 27 ft.*lbf)

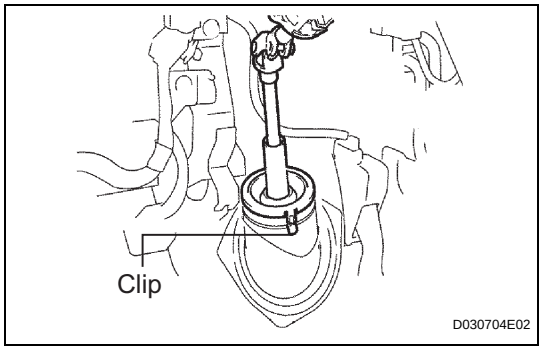

   (c) Install the dust cover to the hole cover. Check that the 3 clips of the dust cover are securely fitted into the groove on the hole cover.

3. **PLACE FRONT WHEELS FACING STRAIGHT AHEAD**
4. **INSTALL SPIRAL CABLE SUB-ASSEMBLY (See page RS-434)**
5. **INSTALL STEERING COLUMN COVER**
6. **CENTER SPIRAL CABLE (See page RS-435)**

7. **INSTALL STEERING WHEEL ASSEMBLY**
   (a) Align the matchmarks on the steering wheel assembly and steering main shaft assembly.
   (b) Install the steering wheel assembly set nut.
   Torque: 50 N*m (510 kgf*cm, 37 ft.*lbf)
   (c) Connect the connector.
8. **INSPECT STEERING WHEEL CENTER POINT**
9. **INSPECT HORN BUTTON ASSEMBLY (See page RS-425)**
10. **INSTALL HORN BUTTON ASSEMBLY (See page RS-424)**
11. **INSTALL STEERING WHEEL COVER LOWER NO.3 (See page RS-425)**
12. **INSTALL STEERING WHEEL COVER LOWER NO.2 (See page RS-425)**
13. **CONNECT BATTERY NEGATIVE TERMINAL**
14. **INSPECT SRS WARNING LIGHT (See page RS-436)**