REMOVAL

1. **DRAIN POWER STEERING FLUID**
2. **REMOVE FRONT WHEEL RH**
3. **REMOVE FRONT FENDER APRON SEAL RH (See page EM-26)**
4. **REMOVE FAN AND GENERATOR V BELT (See page EM-6)**

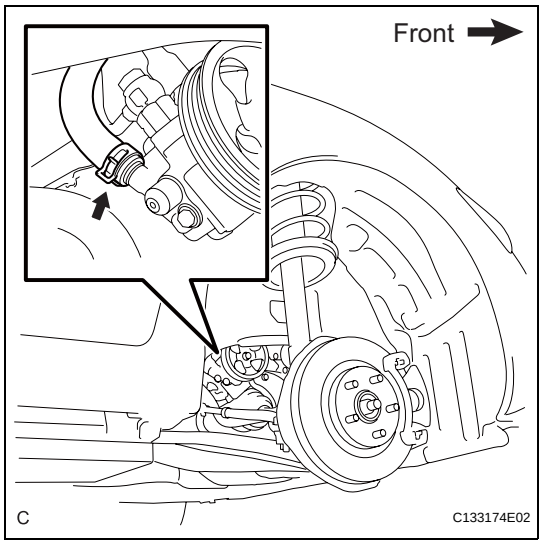

5. **DISCONNECT NO. 1 FLUID RESERVOIR TO PUMP HOSE**
   (a) Slide the clip and disconnect the No. 1 fluid reservoir to pump hose from the vane pump assembly.

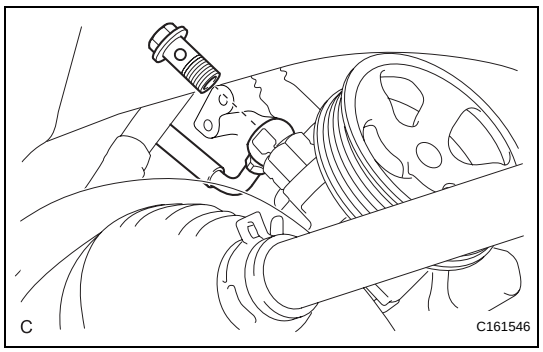

6. **DISCONNECT PRESSURE FEED TUBE ASSEMBLY**
   (a) Remove the union bolt and disconnect the pressure feed tube assembly from the vane pump assembly.
   (b) Remove the gasket from the pressure feed tube assembly.

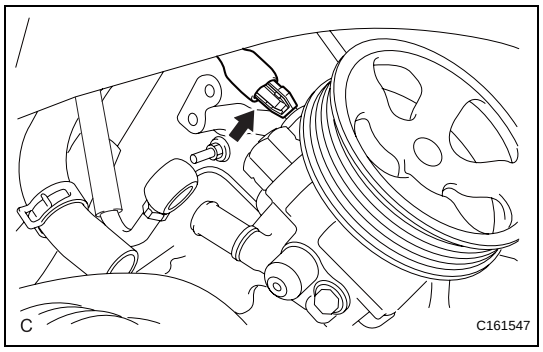

7. **DISCONNECT POWER STEERING FLUID PRESSURE SWITCH CONNECTOR**
   (a) Disconnect the power steering fluid pressure switch connector.

PS

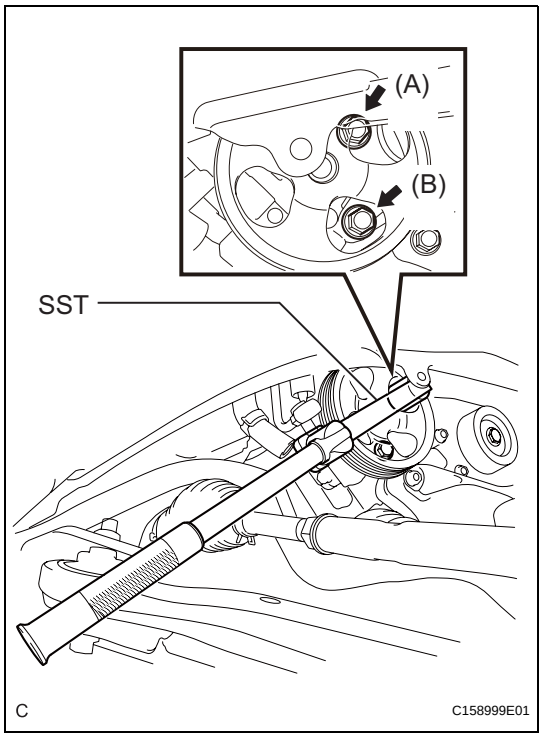

8. REMOVE VANE PUMP ASSEMBLY

(a) Using SST, loosen bolt (A) and remove bolt (B), and then remove the vane pump assembly.
SST 09249-63010

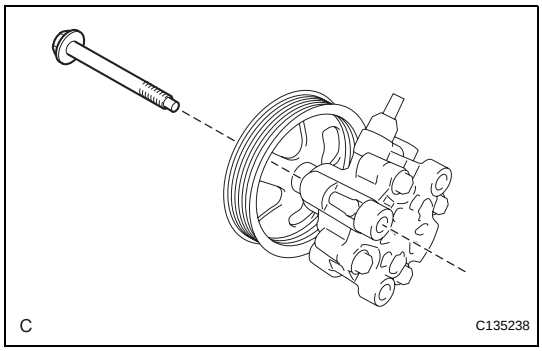

(b) Remove the bolt from the vane pump assembly.

DISASSEMBLY

1. HOLD VANE PUMP ASSEMBLY

(a) Using SST, hold the vane pump assembly in a vise.
SST 09630-00014 (09631-00132)

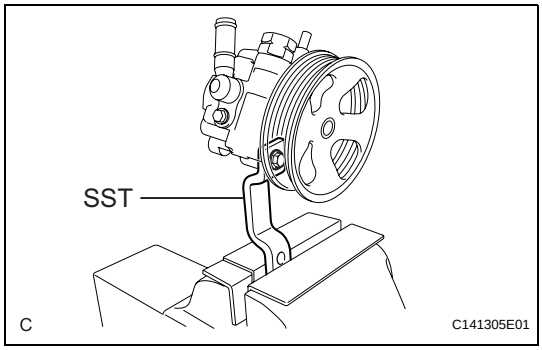

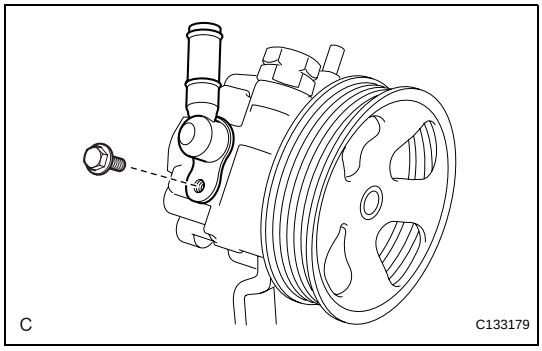

2. REMOVE POWER STEERING SUCTION PORT UNION

(a) Remove the bolt and the power steering suction port union from the vane pump front housing.

(b) Using a screwdriver, remove the O-ring from the power steering suction port union.

3. REMOVE POWER STEERING FLUID PRESSURE SWITCH

NOTICE:
Perform this procedure only when the power steering fluid pressure switch is replaced.

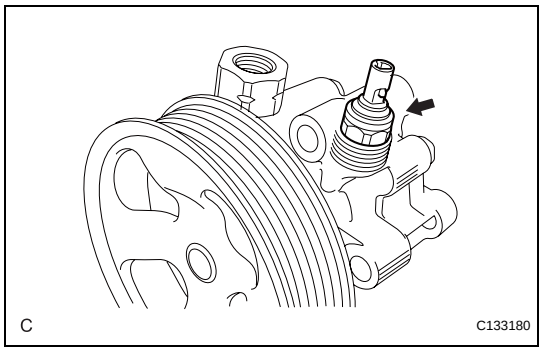

(a) Remove the power steering fluid pressure switch from the vane pump front housing.

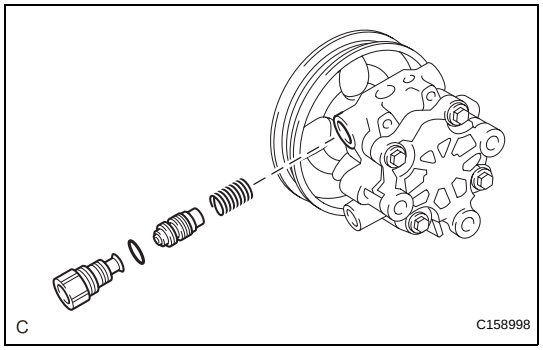

4. REMOVE FLOW CONTROL VALVE ASSEMBLY

(a) Remove the pressure port union from the vane pump front housing.
(b) Remove the O-ring from the pressure port union.
(c) Remove the flow control valve assembly and the flow control valve compression spring from the vane pump front housing.

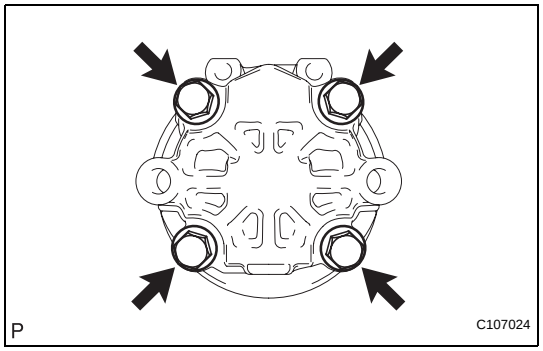

5. REMOVE VANE PUMP REAR HOUSING

(a) Remove the 4 bolts and vane pump rear housing from the vane pump front housing.

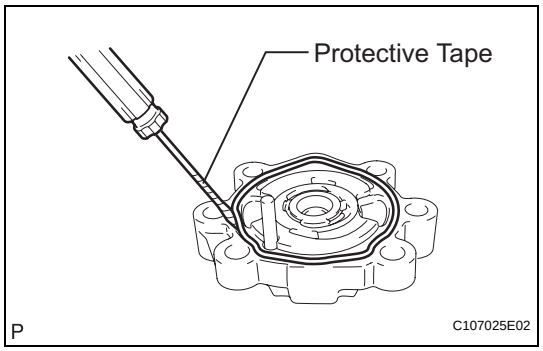

(b) Using a screwdriver, remove the O-ring from the vane pump rear housing.
HINT:
Tape the screwdriver tip before use.

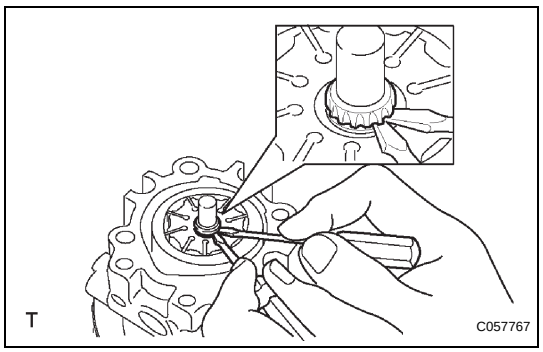

6. REMOVE VANE PUMP SHAFT WITH PULLEY

(a) Using 2 screwdrivers, remove the vane pump shaft snap ring from the vane pump shaft with pulley.
(b) Remove the vane pump shaft with pulley.

PS

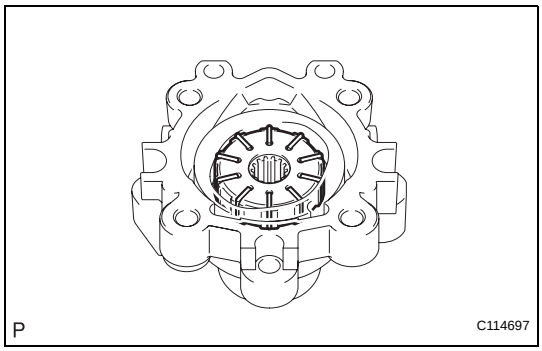

7. REMOVE VANE PUMP ROTOR

(a) Remove the 10 vane pump plates.

(b) Remove the vane pump rotor.

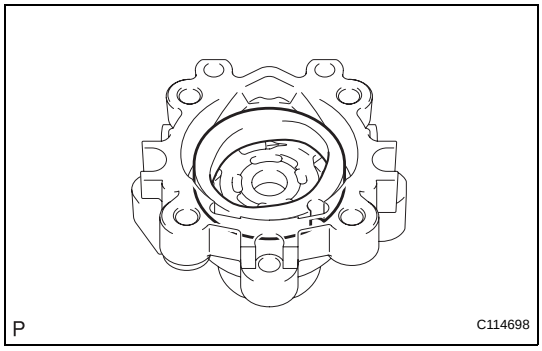

8. REMOVE VANE PUMP CAM RING

(a) Remove the vane pump cam ring from the vane pump front housing.

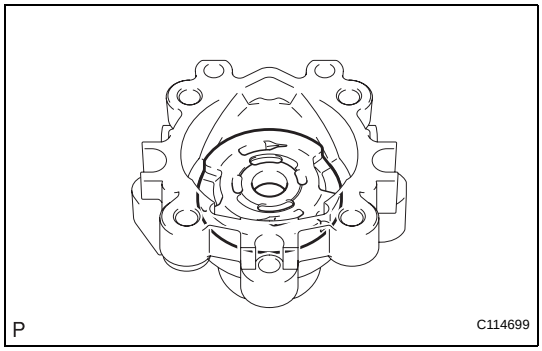

9. REMOVE VANE PUMP FRONT SIDE PLATE

(a) Remove the vane pump front side plate from the vane pump front housing.

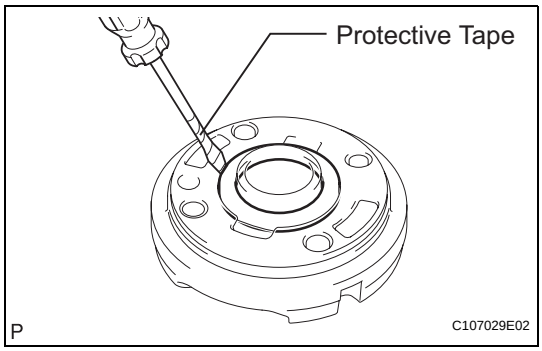

(b) Using a screwdriver, remove the O-ring from the vane pump front side plate.
HINT:
Tape the screwdriver tip before use.

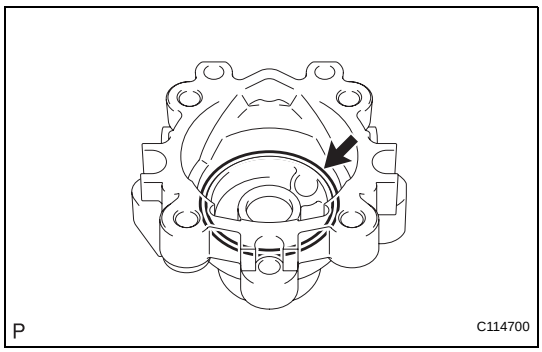

(c) Remove the O-ring from the vane pump front housing.

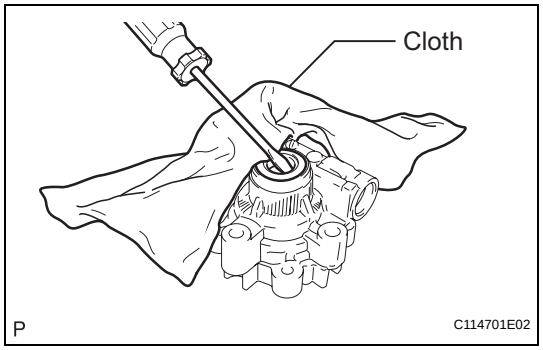

10. REMOVE VANE PUMP HOUSING OIL SEAL

(a) Using a screwdriver and a shop rag or a piece of cloth, remove the vane pump housing oil seal from the vane pump front housing.

NOTICE:

Be careful not to damage the vane pump front housing.

PS

INSPECTION

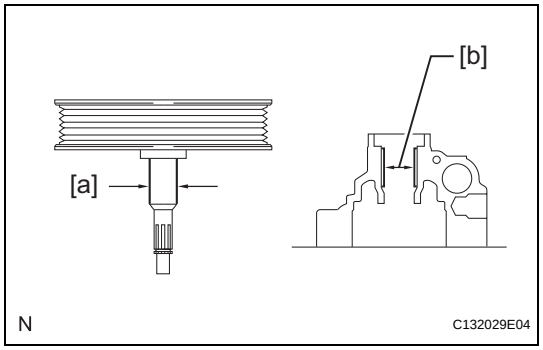

1. INSPECT VANE PUMP SHAFT AND BUSHING IN VANE PUMP FRONT HOUSING

(a) Using a micrometer, measure the outer diameter [a] of the vane pump shaft with pulley.

(b) Using vernier calipers, measure the inner diameter [b] of the vane pump front housing bushing.

(c) Calculate the oil clearance.

Oil clearance = Inner diameter of the bushing [b] - Outer diameter of the shaft [a]

Maximum oil clearance:

0.07 mm (0.0028 in.)

If the oil clearance exceeds the maximum, replace the vane pump assembly.

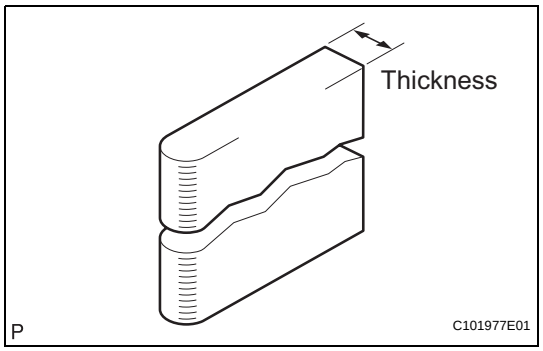

2. INSPECT VANE PUMP ROTOR AND VANE PUMP PLATE CLEARANCE

(a) Using a micrometer, measure the thickness of the vane pump plates.

Standard thickness:

1.405 to 1.411 mm (0.05531 to 0.05555 in.)

If the thickness is not within the specified range, replace the vane pump assembly.

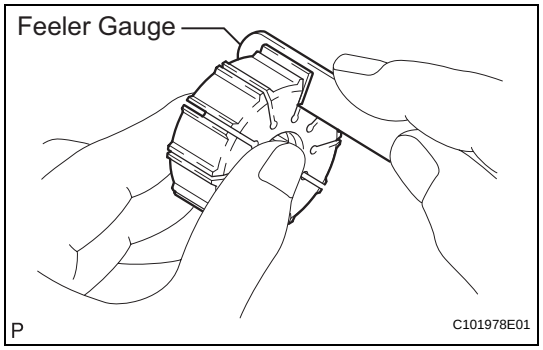

(b) Using a feeler gauge, measure the clearance between the side face of the vane pump rotor groove and the vane pump plates.

Maximum clearance:

0.03 mm (0.0012 in.)

If the clearance exceeds the maximum, replace the vane pump assembly.

PS

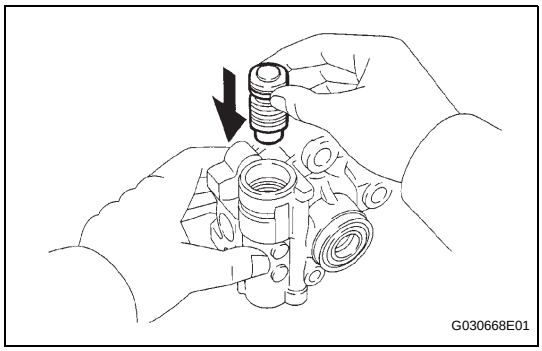

3. INSPECT FLOW CONTROL VALVE ASSEMBLY

(a) Coat the flow control valve assembly with power steering fluid and check that it falls smoothly into the flow control valve due to its own weight.
If the control valve does not fall into the hole smoothly, replace the vane pump assembly.

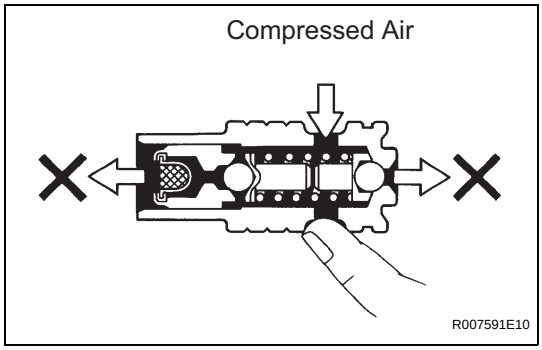

(b) Check the flow control valve assembly for leaks.
Close one of the holes and apply compressed air, 392 to 490 kPa (4 to 5 kgf/cm^2, 57 to 71 psi), into the opposite side hole, and confirm that air does not come out from the holes in the ends of the flow control valve assembly.
If air leaks, replace the vane pump assembly.

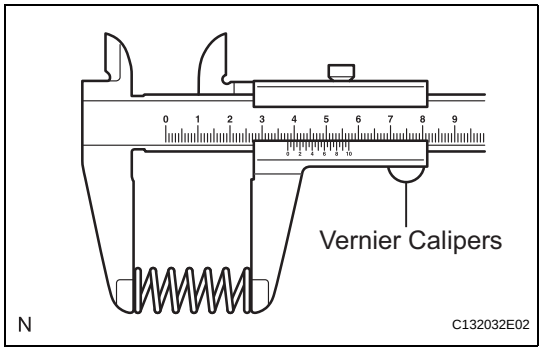

4. INSPECT FLOW CONTROL VALVE COMPRESSION SPRING

(a) Using vernier calipers, measure the free length of the flow control valve compression spring.
Minimum free length:
29.2 mm (1.150 in.)
If the length is less than the minimum, replace the vane pump assembly.

5. INSPECT PRESSURE PORT UNION

If the union seat in the pressure port union is severely damaged, replace the vane pump assembly.

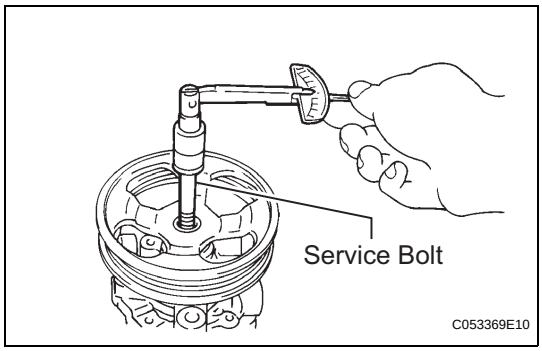

6. INSPECT TOTAL PRELOAD

(a) Check that the pump rotates smoothly without abnormal noise.

(b) Temporarily install the service bolt.
Recommended service bolt:
Thread diameter:
10 mm (0.39 in.)
Thread pitch:
1.25 mm (0.0492 in.)
Bolt length:
50 mm (1.97 in.)

(c) Using a torque wrench, check the pump rotating torque.
Rotating torque:
0.27 N*m (2.8 kgf*cm, 2.4 in.*lbf) or less
If the rotating torque is not as specified, check the vane pump housing oil seal.