PS

REMOVAL

NOTICE:
When installing, coat the parts indicated by the arrows with power steering fluid or molybdenum disulfide lithium base grease (See page PS-21).

1. **INSPECT CENTER FRONT WHEEL**
2. **REMOVE FRONT WHEEL**
3. **SEPARATE TIE ROD ASSEMBLY LH**
   SST 09628-62011
4. **SEPARATE TIE ROD ASSEMBLY RH**
   SST 09628-62011
   HINT:
   Perform the same procedure on the other side.
5. **SEPARATE STEERING INTERMEDIATE SHAFT ASSEMBLY**
   (a) Fix the steering wheel with the seat belt.

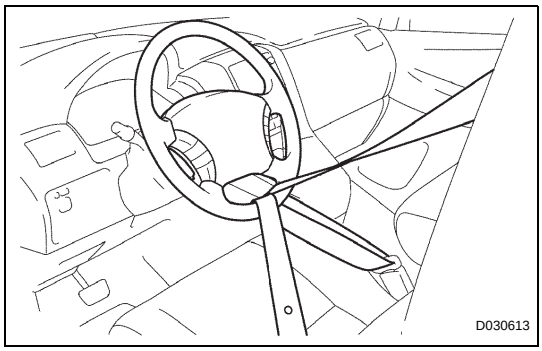

   (b) Release the 3 springs and separate the dust cover.

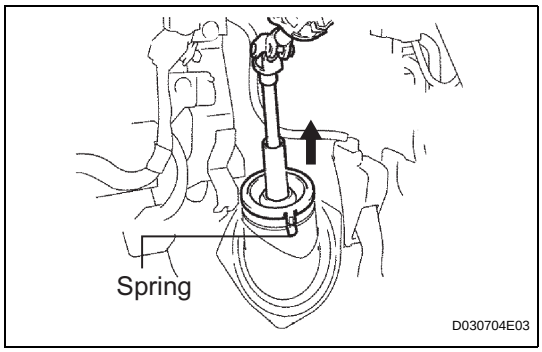

   (c) Place matchmarks on the intermediate shaft assembly and power steering gear assembly.
   (d) Remove the bolt and separate the intermediate shaft assembly.

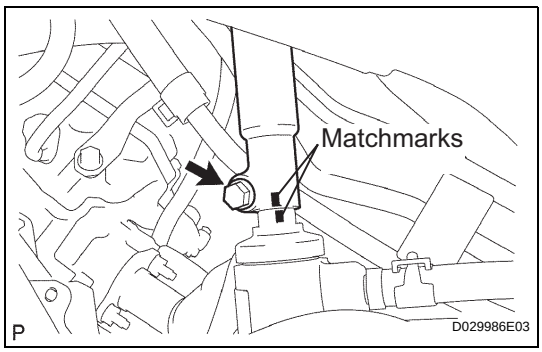

6. **SEPARATE FRONT STABILIZER LINK ASSEMBLY LH**
7. **SEPARATE FRONT STABILIZER LINK ASSEMBLY RH**
   HINT:
   Perform the same procedure on the other side.

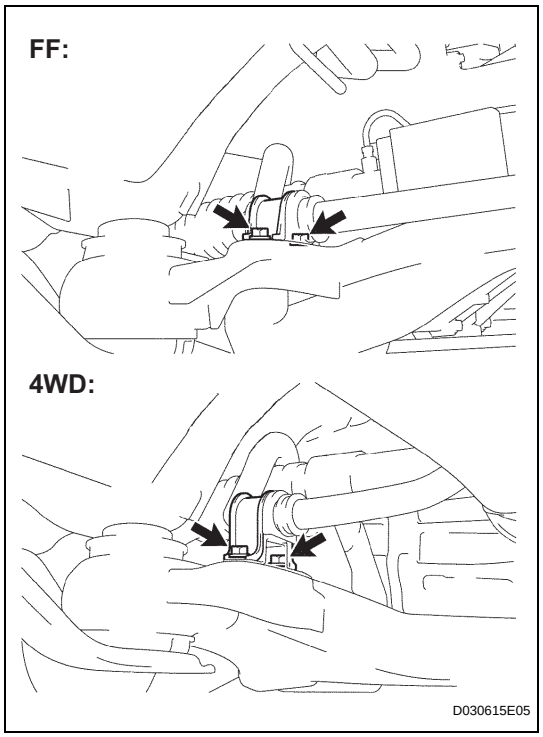

8. REMOVE FRONT STABILIZER BRACKET NO.1 LH

(a) Remove the 2 bolts and remove the stabilizer bracket No. 1.

9. REMOVE FRONT STABILIZER BRACKET NO.1 RH

HINT:

Perform the same procedure on the other side.

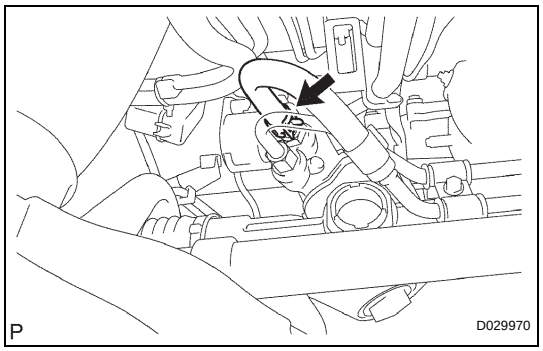

10. DISCONNECT PRESSURE FEED TUBE ASSEMBLY

(a) Remove the clip and disconnect the return tube assembly from the power steering gear assembly.

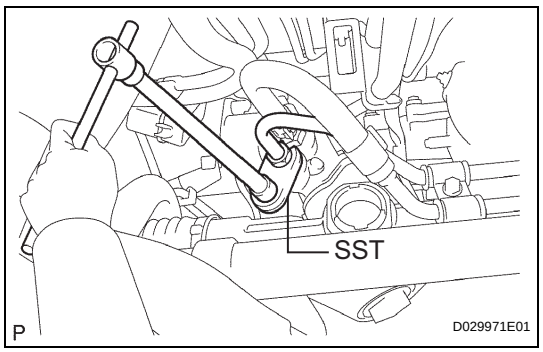

(b) Using SST, disconnect the pressure feed tube assembly from the power steering gear assembly.

SST 09023-12701

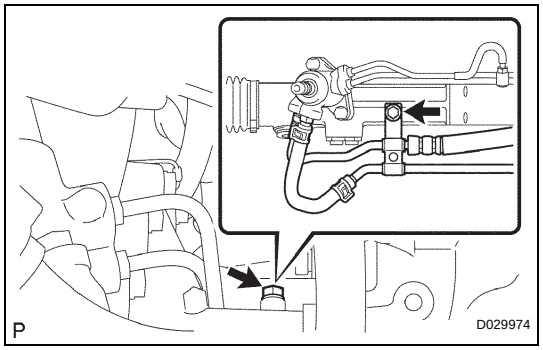

(c) Remove the bolt and separate the tube clamp.

PS

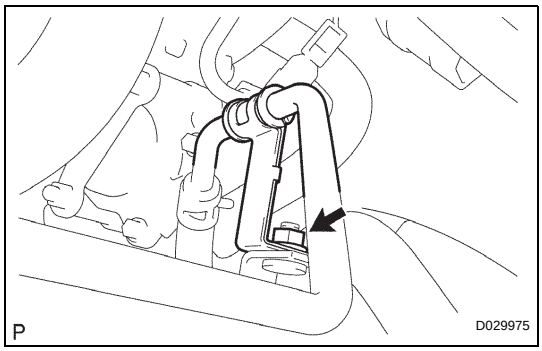

(d) Remove the nut and separate the tube clamp.

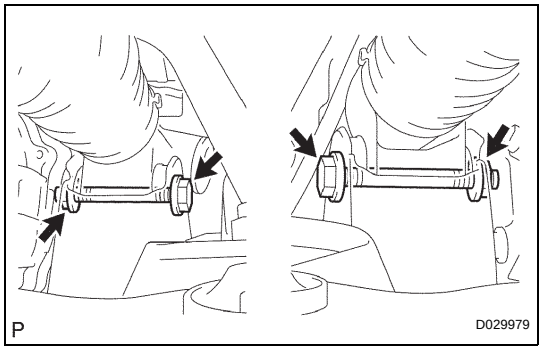

11. REMOVE RACK & PINION POWER STEERING GEAR ASSEMBLY

(a) Remove the 2 bolts, nuts and the power steering gear assembly.

NOTICE:
Do not damage the 2 pressure tubes.

DISASSEMBLY

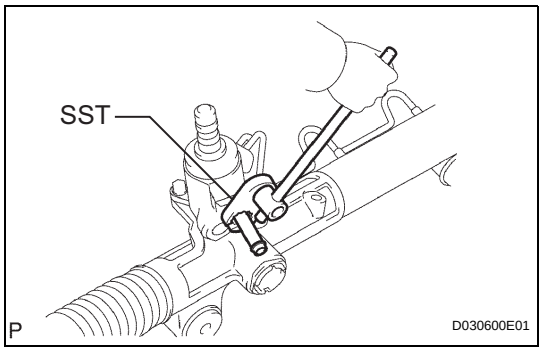

1. REMOVE RETURN TUBE NO.2

(a) Using SST, remove the return tube No. 2.
SST 09023-12701

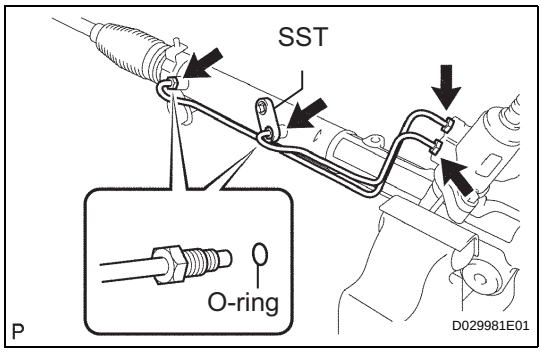

2. REMOVE STEERING LEFT TURN PRESSURE TUBE

(a) Using SST, remove the left turn pressure tube.
SST 09023-38201

(b) Remove the 2 O-rings from the left turn pressure tube.

3. REMOVE STEERING RIGHT TURN PRESSURE TUBE
SST 09023-38201

HINT:
Perform the same procedure on the other side.

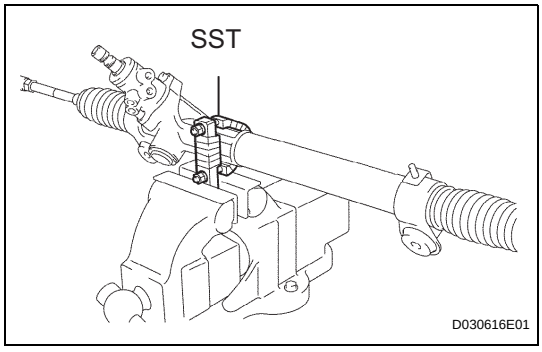

4. FIX RACK & PINION POWER STEERING GEAR ASSEMBLY

(a) Using SST, secure the power steering gear assembly.
SST 09612-00012
HINT:
Tape the SST before use.

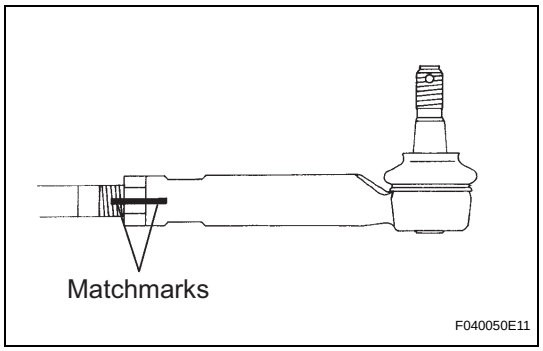

5. REMOVE TIE ROD ASSEMBLY LH

(a) Place matchmarks on the tie rod assembly and rack end sub-assembly.

(b) Loosen the lock nut, and remove the tie rod assembly and lock nut.

6. REMOVE TIE ROD ASSEMBLY RH

HINT:

Perform the same procedure on the other side.

7. REMOVE STEERING RACK BOOT CLIP

(a) Remove the 2 rack boot clips.

8. REMOVE STEERING RACK BOOT NO.2 CLAMP

(a) Using pliers, remove the rack boot No. 2 clamp.

NOTICE:

Be careful not to damage the steering rack boot No. 2.

9. REMOVE STEERING RACK BOOT NO.1 CLAMP

HINT:

Perform the same procedure on the other side.

10. REMOVE STEERING RACK BOOT NO.2

11. REMOVE STEERING RACK BOOT NO.1

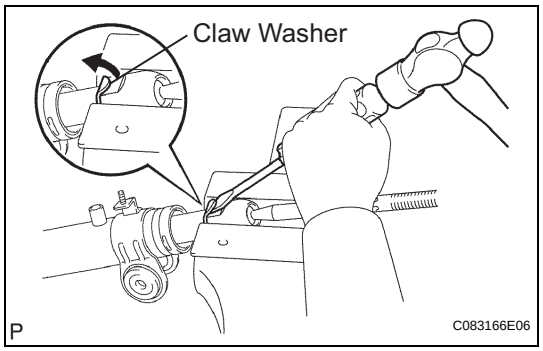

12. REMOVE STEERING RACK END SUB-ASSEMBLY

(a) Using a screwdriver and a hammer, unstake the claw washer.

NOTICE:

Avoid any impact to the power steering rack.

PS

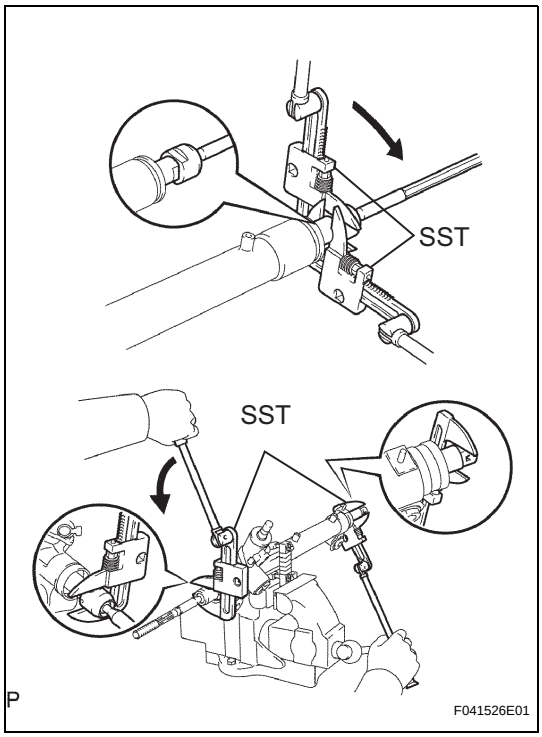

(b) Using 2 SST, remove the 2 steering rack end sub-assembly and 2 claw washers.
SST 09922-10010
NOTICE:
- **Use SST 09922-10010 in the direction shown in the illustration.**
- **Securely hold the power steering rack end with a SST.**

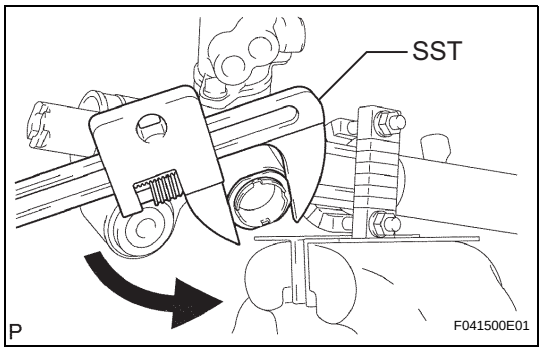

13. REMOVE RACK GUIDE

(a) Using SST, remove the rack guide spring cap nut.
SST 09922-10010
NOTICE:
Use SST 09922-10010in the direction shown in the illustration.

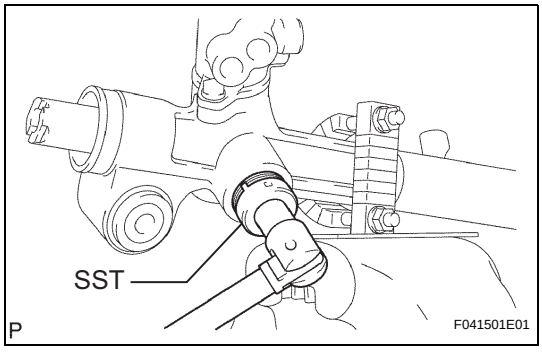

(b) Using SST, remove the rack guide spring cap.
SST 09631-10021

(c) Remove the compression spring and the rack guide.

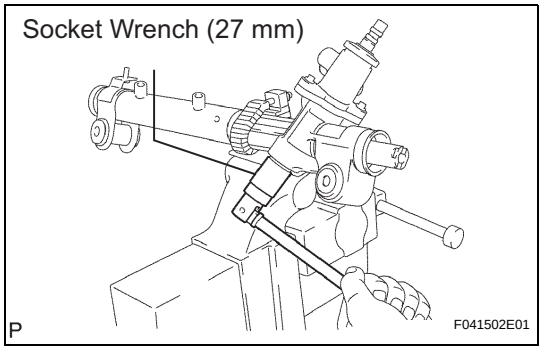

14. REMOVE POWER STEERING CONTROL VALVE

(a) Using a socket wrench (27 mm), remove the rack housing cap.

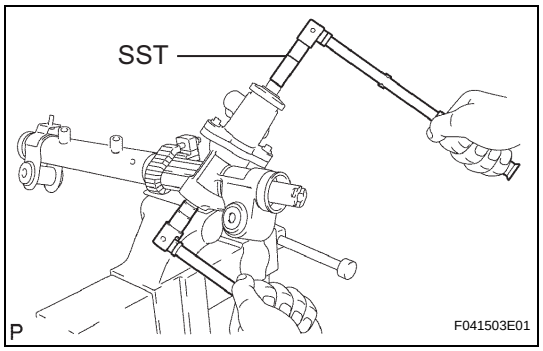

(b) Using SST, hold the control valve and remove the nut.
SST 09616-00011

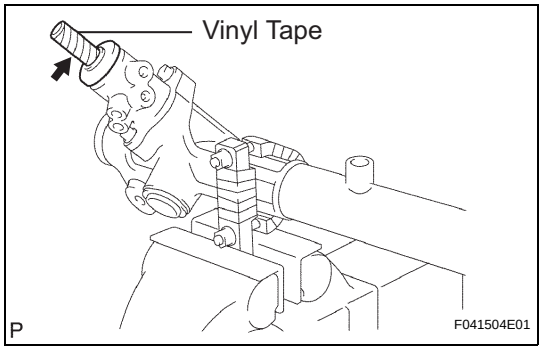

(c) Wind vinyl tape around the serrated part of the control valve.
(d) Remove the dust cover from the control valve housing.

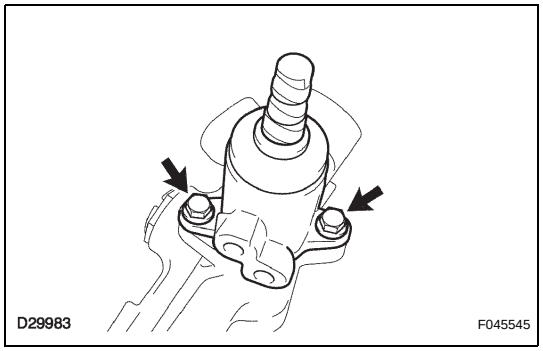

(e) Remove the 2 bolts and the control valve w/ control valve housing.
(f) Remove the gasket.

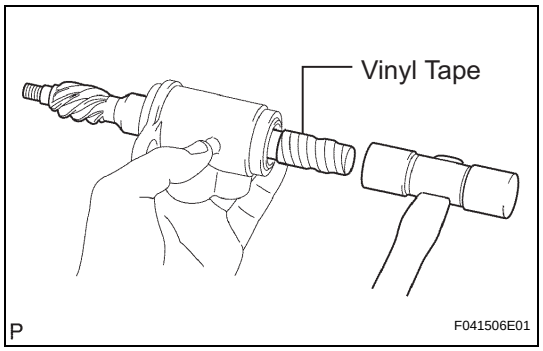

(g) To prevent oil seal lip damage, wind vinyl tape around the serrated part of the control valve.
(h) Using a plastic hammer, remove the control valve w/ oil seal from the control valve housing.
(i) Remove the oil seal from the control valve.

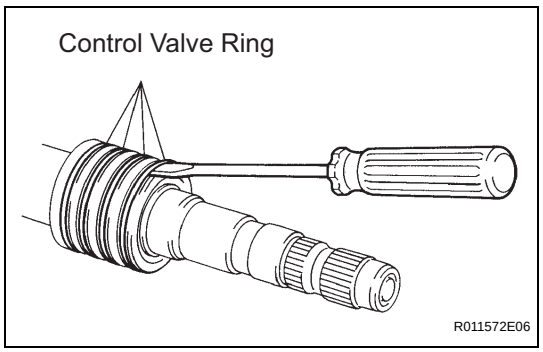

(j) Using a screwdriver, remove the 4 control valve rings.
NOTICE:
Be careful not to damage the grooves for the control valve rings.

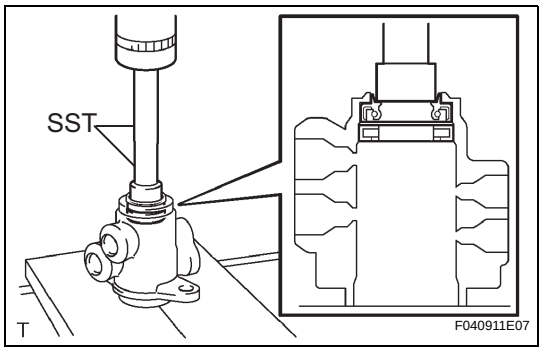

15. REMOVE POWER STEERING CONTROL VALVE UPPER OIL SEAL

(a) Using SST and a press, remove the control valve upper bearing and control valve upper oil seal from the control valve housing.

SST 09950-70010 (09951-07150), 09950-60010 (09951-00250)

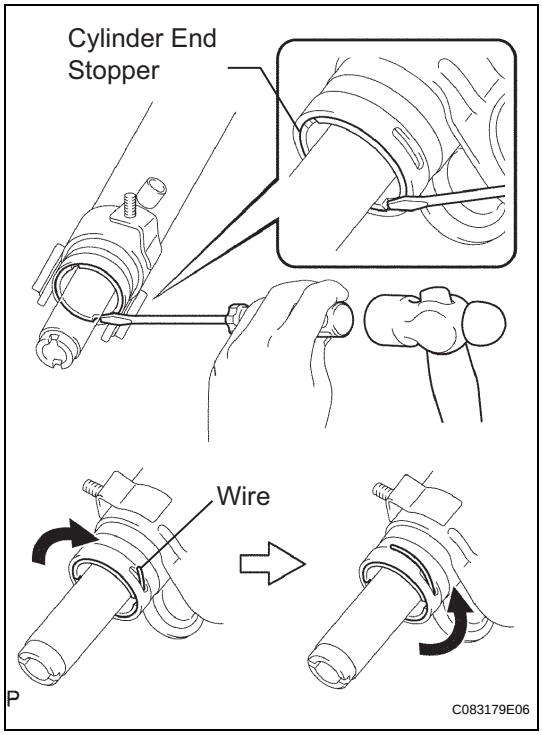

16. REMOVE CYLINDER END STOPPER

(a) Using a screwdriver and a hammer, turn the cylinder end stopper clockwise until the wire end is visible through the service hole.

(b) Using a screwdriver and a hammer, turn the cylinder end stopper counterclockwise, and remove the wire and cylinder end stopper.

17. REMOVE POWER STEERING RACK

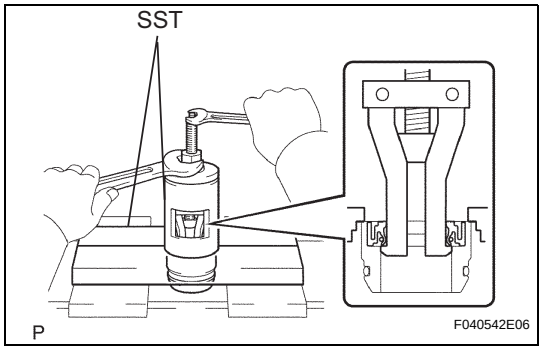

18. REMOVE POWER STEERING RACK BUSH

(a) Remove the rack bush from the power steering rack.

(b) Using SST, remove the rack bush oil seal.

SST 09527-21011, 09612-24014 (09613-22011)

(c) Using a screwdriver, remove the O-ring from the rack bush.

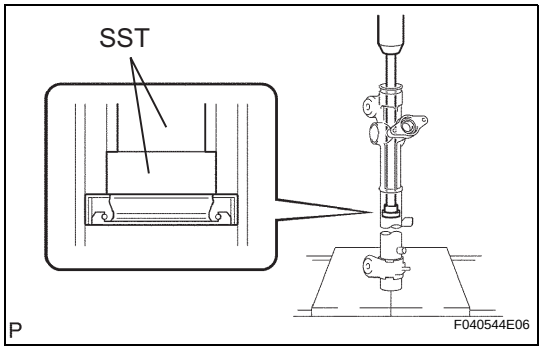

19. REMOVE POWER STEERING CYLINDER TUBE OIL SEAL

(a) Using SST and a press, remove the cylinder tube oil seal.

SST 09950-70010 (09951-07360), 09950-60010 (09951-00290)

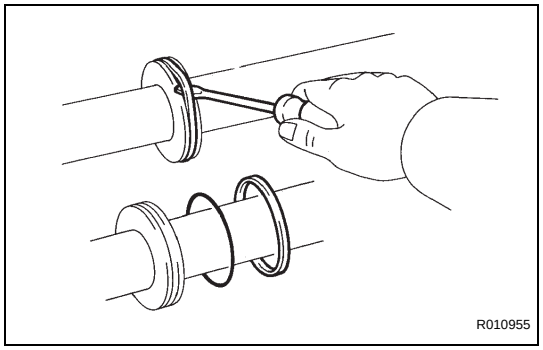
R010955

20. REMOVE RACK STEERING PISTON RING

(a) Using a screwdriver, remove the rack steering piston ring and O-ring.

NOTICE:

Be careful not to damage the grooves for rack steering piston ring.

INSPECTION

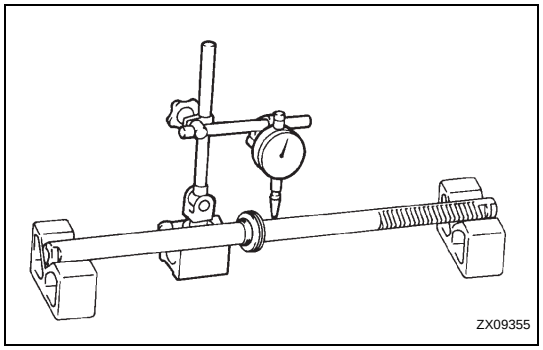
ZX09355

1. INSPECT POWER STEERING RACK

(a) Using a dial indicator, check the power steering rack for runout and for teeth wear and damage.

Maximum runout:

0.3 mm (0.012 in.)

If necessary, replace the rack & pinion power steering gear assembly.

(b) Check the back surface for wear and damage.

If necessary, replace the rack & pinion power steering gear assembly.

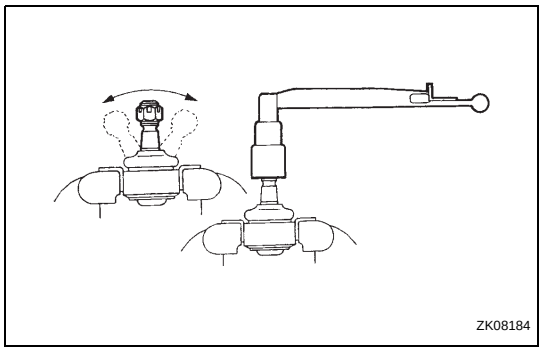
ZK08184

2. INSPECT TIE ROD ASSEMBLY LH

(a) Secure the tie rod assembly in a vise.

(b) Install the nut to the stud bolt.

(c) Flip the ball joint stud back and forth 5 times.

(d) Using a torque wrench, turn the nut continuously at a rate of 3 to 5 seconds per turn and take the torque reading on the 5th turn.

Torque: Turning torque

0.83 to 3.43 N*m (8.5 to 35.0 kgf*cm, 7.3 to 30.4 in.*lbf)

3. INSPECT TIE ROD ASSEMBLY RH

HINT:

Perform the same procedure on the other side.

REASSEMBLY

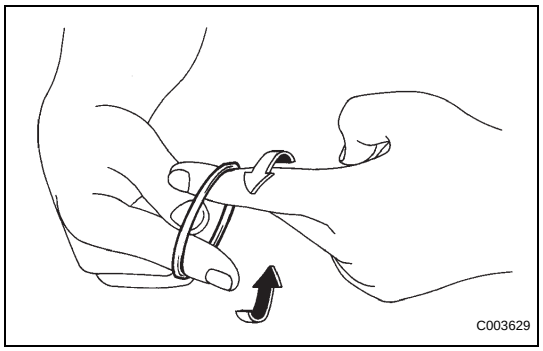
C003629

1. INSTALL RACK STEERING PISTON RING

(a) Coat a new O-ring with power steering fluid and install it onto the power steering rack.

(b) Expand a new rack steering piston ring with your fingers.

NOTICE:

Be careful not to over expand the rack steering piston ring.

(c) Coat a new rack steering piston ring with power steering fluid.

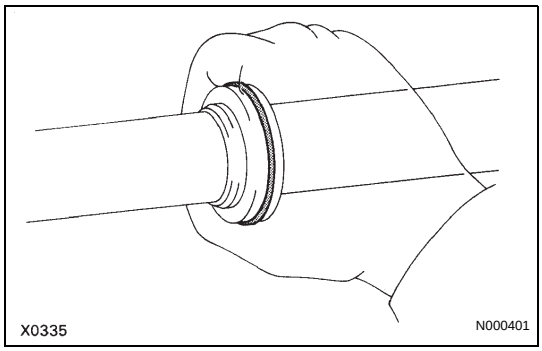

(d) Install the rack steering piston ring onto the power steering rack, and settle it down with your fingers.

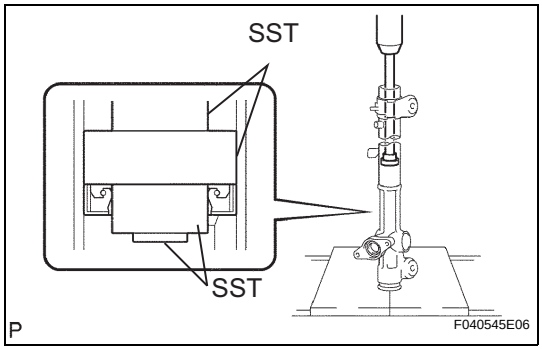

2. INSTALL POWER STEERING CYLINDER TUBE OIL SEAL

(a) Coat a new cylinder tube oil seal lip with power steering fluid.

(b) Using SST and a press, install the cylinder tube oil seal.

SST 09950-60010 (09951-00420, 09951-00250, 09952-06010), 09950-70010 (09951-07360)

NOTICE:

- **Make sure that the cylinder tube oil seal is installed facing in the correct direction.**
- **Take care so that the cylinder tube oil seal will not be reversed as you install it.**

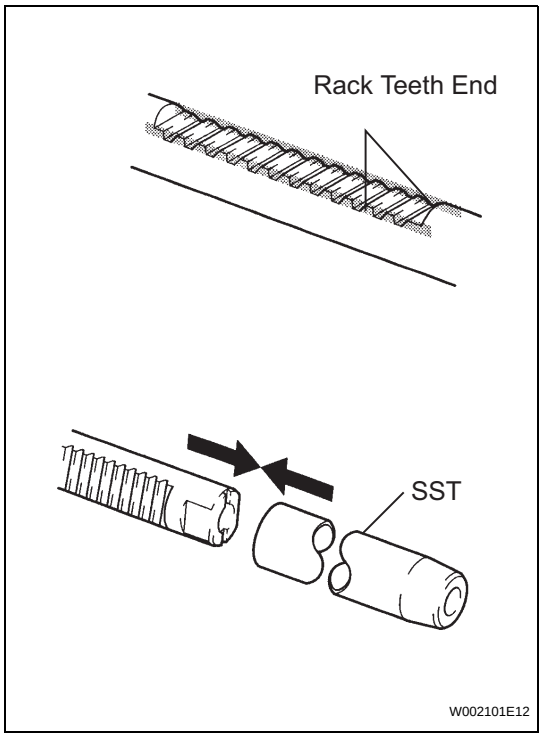

3. INSTALL POWER STEERING RACK

(a) Install SST onto the power steering rack.

SST 09631-33010

HINT:

If necessary, scrape the burrs off the power steering rack teeth end and burnish.

(b) Coat the SST with power steering fluid.

(c) Install the power steering rack into the rack housing.

(d) Remove the SST.

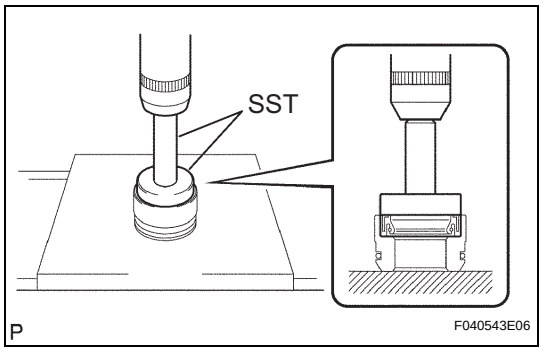

4. INSTALL POWER STEERING RACK BUSH

(a) Using SST and a press, install the rack bush oil seal onto the rack bush.

SST 09950-60010 (09951-00400), 09950-70010 (09951-07100)

NOTICE:

Make sure that the rack bush oil seal is installed facing in the correct direction.

(b) Coat a new O-ring with power steering fluid and install it onto the rack bush.

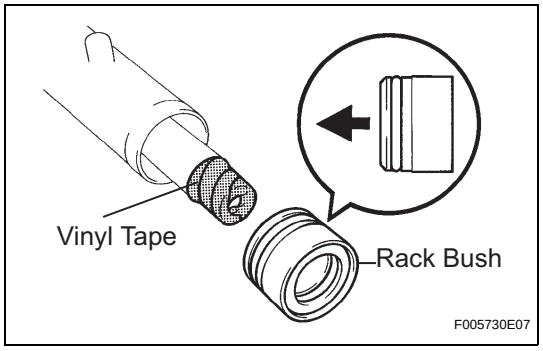

(c) To prevent rack bush oil seal lip damage, wind vinyl tape around the rack end, and apply power steering fluid.

(d) Install the rack bush onto the power steering rack.

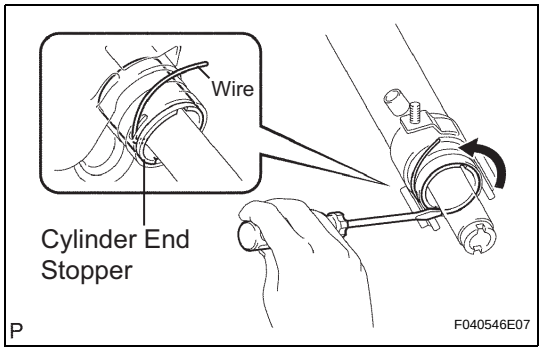

5. INSTALL CYLINDER END STOPPER

(a) Align the installation hole for the wire of the cylinder end stopper with the slot of the rack housing.

(b) Install a new wire into the cylinder end stopper.

(c) Using a screwdriver, turn the cylinder end stopper counterclockwise by 450 +- 50°.

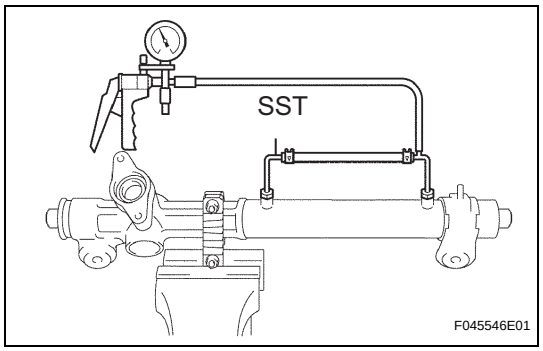

6. AIR TIGHTNESS TEST

(a) Install SST onto the rack housing.

SST 09631-12071 (09633-00010)

(b) Apply vacuum of 53 kPa (400 mmHg, 15.75 in.Hg) for about 30 seconds.

(c) Check that there is no change in the vacuum.
If there is a change in the vacuum, check the installation of the oil seals.

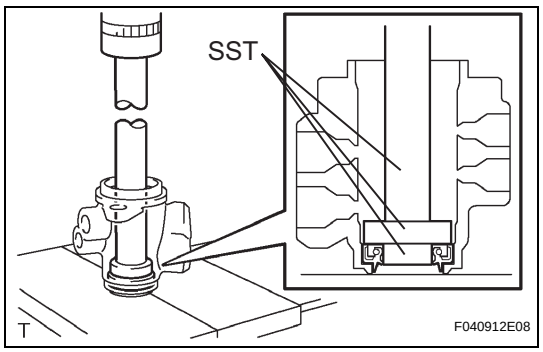

7. INSTALL POWER STEERING CONTROL VALVE UPPER OIL SEAL

(a) Coat a control valve upper bearing and a new control valve upper oil seal with power steering fluid.

(b) Using SST and a press, install the control valve upper oil seal.

SST 09950-70010 (09951-07150), 09950-60010 (09951-00180, 09952-06010, 09951-00320)

PS

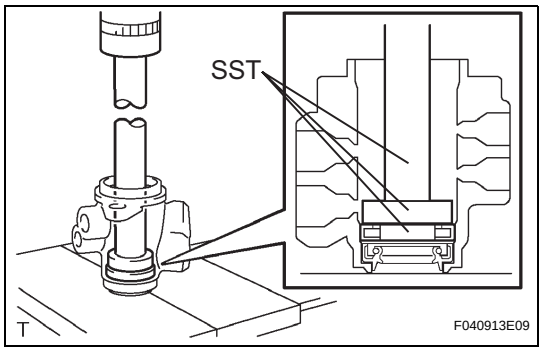

(c) Using SST and a press, install the control valve upper bearing.
SST 09950-70010 (09951-07150), 09950-60010 (09951-00180, 09952-06010, 09951-00340)

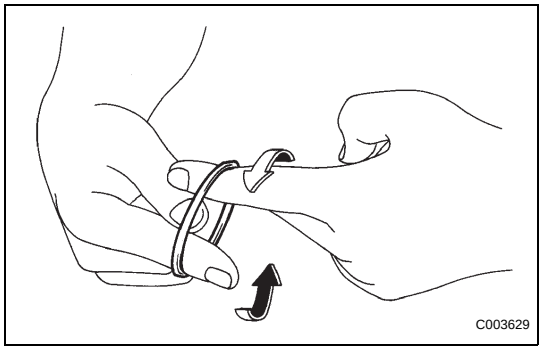

8. INSTALL POWER STEERING CONTROL VALVE

(a) Expand 4 new control valve rings with your fingers.
NOTICE:
Be careful not to over expand the control valve rings.

(b) Coat the 4 control valve rings with power steering fluid.

(c) Install the 4 control valve rings onto the control valve, and settle them down with your fingers.

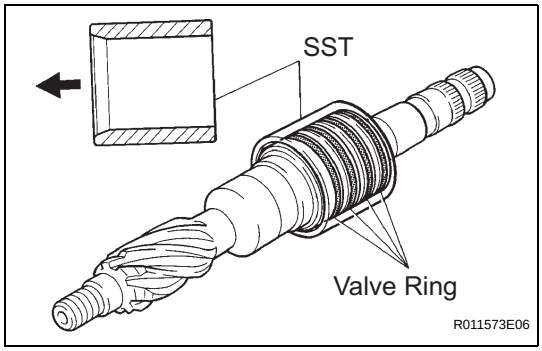

(d) Carefully slide the tapered end of SST over the control valve rings until they fit to the control valve.
SST 09631-20081
NOTICE:
Be careful not to damage the control valve rings.

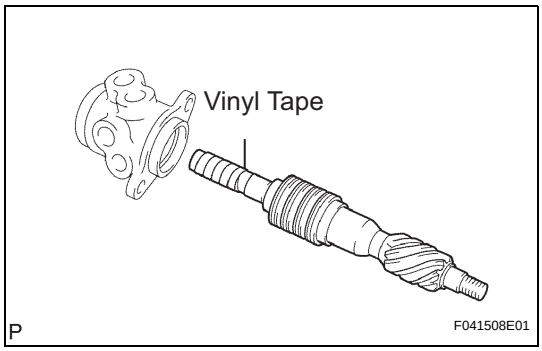

(e) To prevent control valve upper oil seal lip damage, wind vinyl tape around the serrated part of the control valve.

(f) Coat the control valve upper oil seal lip with power steering fluid.

(g) Install the control valve onto the control valve housing.
NOTICE:
Be careful not to damage the control valve ring and control valve upper oil seal lip.

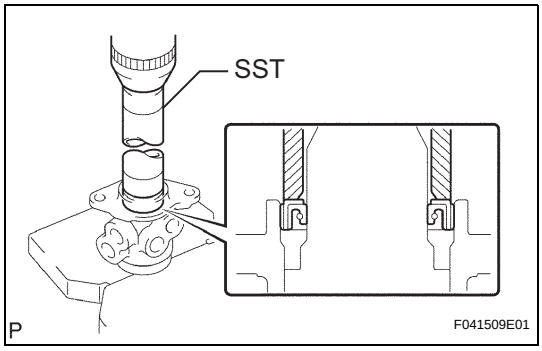

(h) Coat a new oil seal lip with power steering fluid.

(i) Using SST and a press, install the oil seal.
SST 09612-22011
NOTICE:
Make sure that the oil seal is installed facing in the correct direction.

(j) Apply grease to the needle roller bearing.

(k) Install a new gasket onto the control valve housing.

(l) Wind vinyl tape around the serrated part of the control valve.

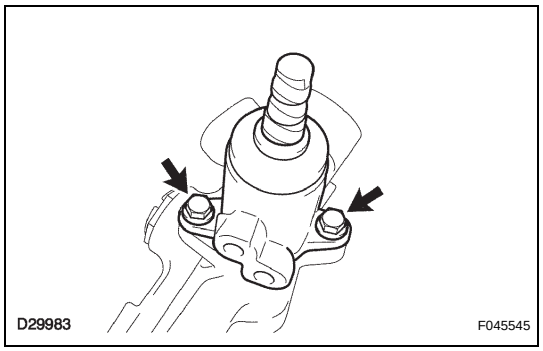

(m) Install the control valve w/ control valve housing onto the rack housing with the 2 bolts.
Torque: 18 N*m (184 kgf*cm, 13 ft.*lbf)

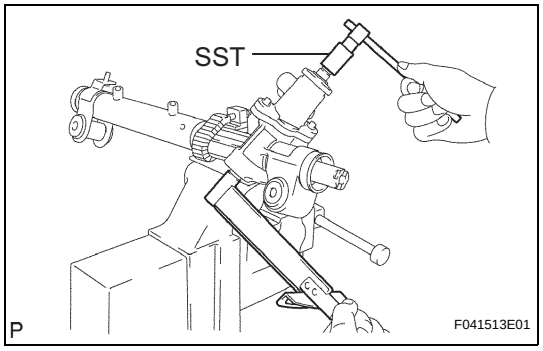

(n) Using SST, hold the control valve rotation and install a new lock nut.
SST 09616-00011
Torque: 25 N*m (250 kgf*cm, 18 ft.*lbf)

(o) Apply sealant to 2 or 3 threads of the rack housing cap.
Sealant:
Toyota Genuine Adhesive 1344, Three Bond 1344, or equivalent

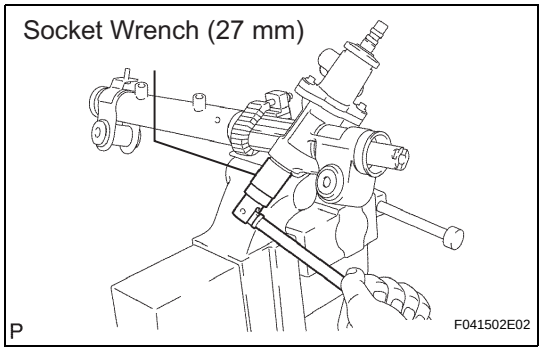

(p) Using a socket wrench (27 mm), install the rack housing cap.
Torque: 59 N*m (597 kgf*cm, 43 ft.*lbf)

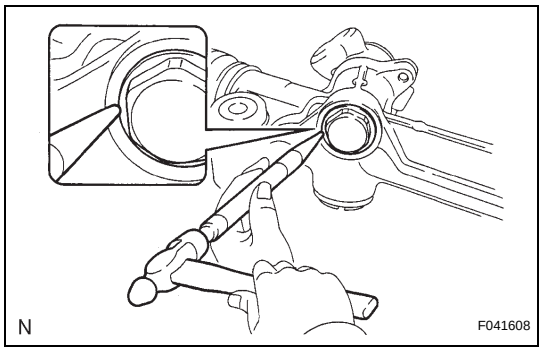

(q) Using a punch and a hammer, stake the rack housing cap and rack housing.

9. INSTALL RACK GUIDE

(a) Install the rack guide.
(b) Install the compression spring.
(c) Apply sealant to 2 or 3 threads of the rack guide spring cap.
Sealant:
Toyota Genuine Adhesive 1344, Three Bond 1344, or equivalent
(d) Temporarily install the rack guide spring cap.

PS

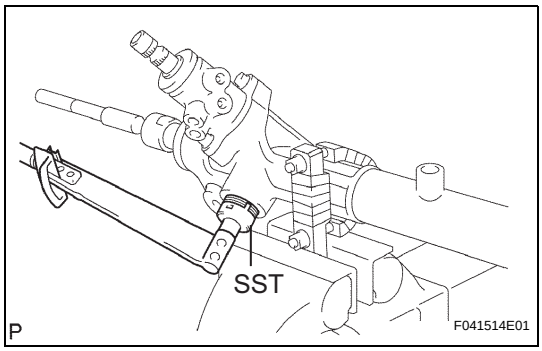

10. INSTALL TOTAL PRELOAD

(a) To prevent the steering rack teeth from damaging the oil seal lip, temporarily install the RH and LH steering rack ends sub-assembly.

(b) Using SST, torque the rack guide spring cap.
SST 09631-10021
Torque: 25 N*m (254 kgf*cm, 18 ft.*lbf)

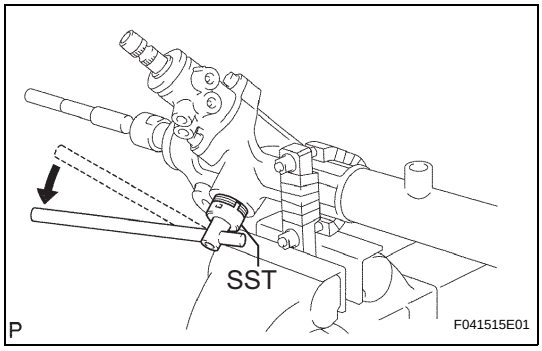

(c) Using SST, loosen the rack guide spring cap.
SST 09631-10021

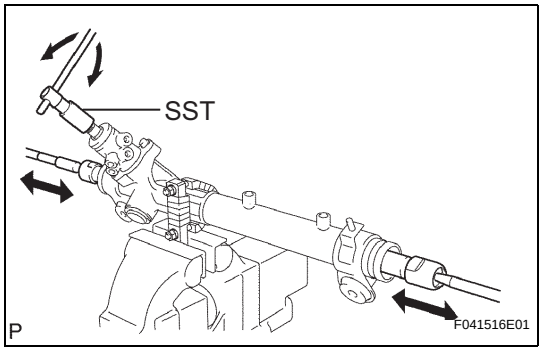

(d) Using SST, turn the control valve to the right and left 1 or 2 times.
SST 09616-00011

(e) Using SST, loosen the rack guide spring cap until the compression spring is not functioning.
SST 09631-10021

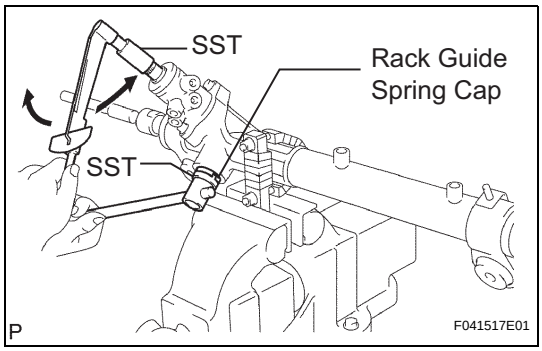

(f) Using SST and a torque wrench, tighten the rack guide spring cap until the preload is within specification.
SST 09631-10021, 09616-00011
Torque: Preload (turning)
1.2 to 1.5 N*m (12.2 to 15.3 kgf*cm, 10.6 to 13.3 in.*lbf)

(g) Apply sealant to 2 or 3 threads of the rack guide spring cap nut.
Sealant:
Toyota Genuine Adhesive 1344, Three Bond 1344, or equivalent

(h) Temporarily install the rack guide spring cap nut.

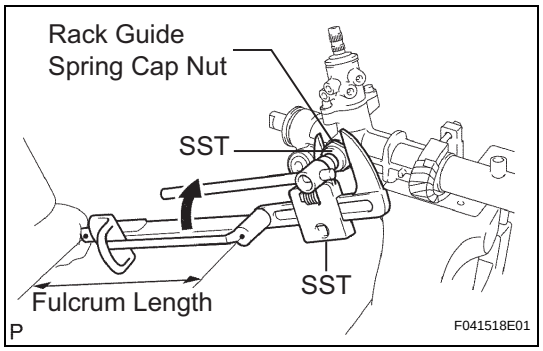

(i) Using SST, hold the rack guide spring cap and using another SST, torque the rack guide spring cap nut.
SST 09616-00011, 09922-10010
Torque: 48 N*m (489 kgf*cm, 35 ft.*lbf)
NOTICE:
Use SST 09922-10010 in the direction shown in the illustration.
HINT:
Use a torque wrench with a fulcrum length of 345 mm (13.58 in.).

(j) Precheck the total preload.
Torque: Preload (turning)
1.2 to 1.5 N*m (12.2 to 15.3 kgf*cm, 10.6 to 13.3 in.*lbf)

(k) Remove the RH and LH steering rack ends sub-assembly.

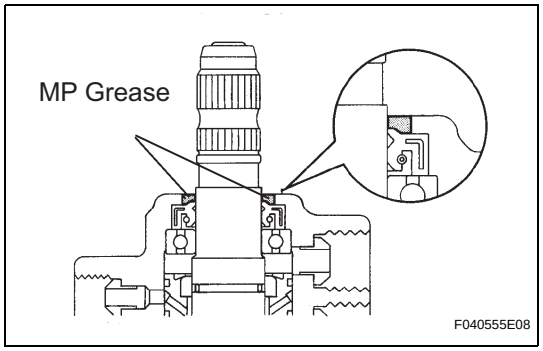

(l) Apply MP grease to the control valve, as shown in the illustration.

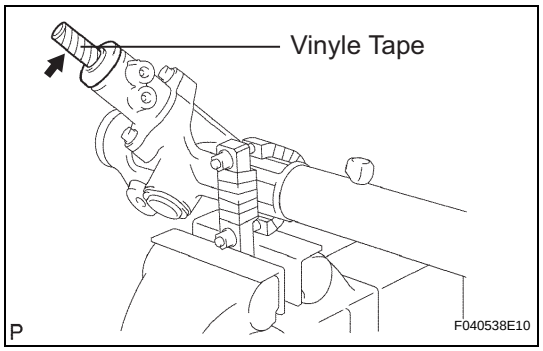

(m) Wind vinyl tape around the serrated part of the control valve.

(n) Install the dust cover onto the control valve housing.

PS

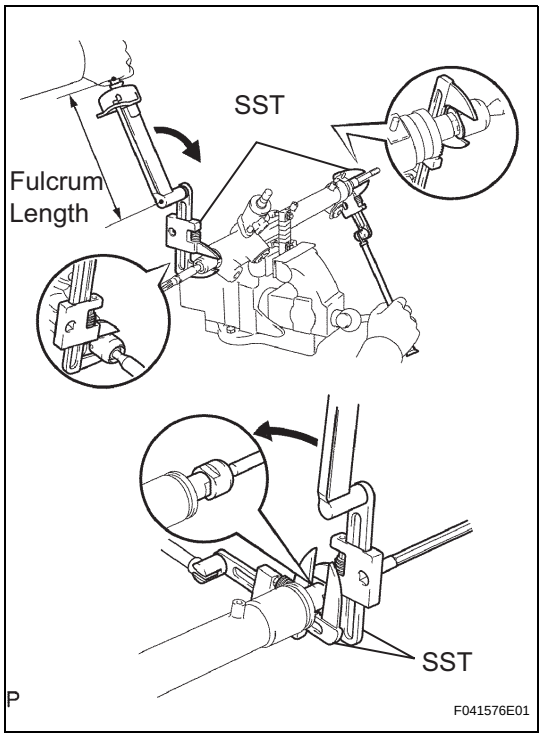

11. INSTALL STEERING RACK END SUB-ASSEMBLY

(a) Install 2 new claw washers, and temporarily install the 2 steering rack end sub-assembly.
HINT:
Align the claws of the claw washer with the power steering rack grooves.

(b) Using 2 SST, install the 2 rack end sub-assembly.
SST 09922-10010
Torque: 58.5 N*m (597 kgf*cm, 43 ft.*lbf)
NOTICE:
Use SST 09922-10010 in the direction shown in the illustration.
HINT:
- Using SST, hold the power steering rack and install the rack end sub-assembly.
- Use a torque wrench with a fulcrum length of 345 mm (13.58 in.).

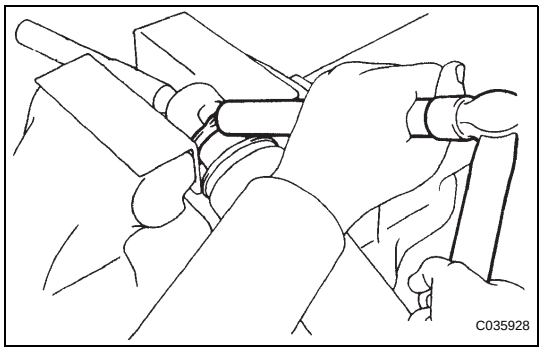

(c) Using a brass bar and a hammer, stake the 2 claw washers.
NOTICE:
Avoid any impact to the power steering rack.

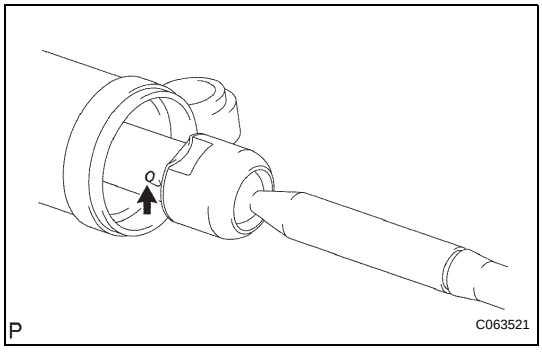

12. INSPECT STEERING RACK END SUB-ASSEMBLY

(a) Ensure that the rack end sub-assembly hole is not clogged with grease.
HINT:
If the hole is clogged, the pressure inside the boot will change after it is assembled and steering wheel is turned.

13. INSTALL STEERING RACK BOOT NO.2

14. INSTALL STEERING RACK BOOT NO.1

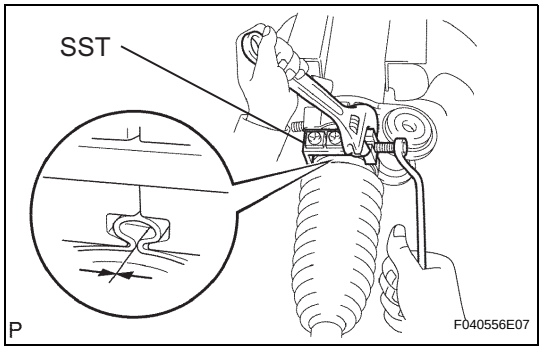

15. INSTALL STEERING RACK BOOT NO.2 CLAMP

(a) Using SST, tighten the rack boot No.2 clamp, as shown in the illustration.
SST 09521-24010
Clearance:
3.0 mm (0.118 in.) or less
NOTICE:
Be careful not to damage the rack boot No. 2.

16. INSTALL STEERING RACK BOOT NO.1 CLAMP
SST 09521-24010

HINT:
Perform the same procedure on the other side.

17. INSTALL STEERING RACK BOOT CLIP

(a) Using pliers, install the 2 rack boot clips.

18. INSTALL TIE ROD ASSEMBLY LH

(a) Screw the lock nut and tie rod assembly onto the rack end sub-assembly until the matchmarks are aligned.
HINT:
After adjusting toe-in, torque the lock nut.

19. INSTALL TIE ROD ASSEMBLY RH

HINT:
Perform the same procedure on the other side.

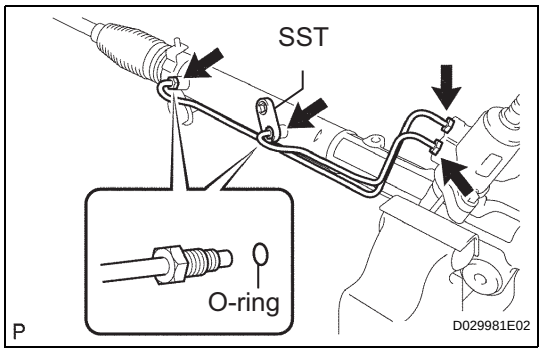

20. INSTALL STEERING LEFT TURN PRESSURE TUBE

(a) Coat 2 new O-rings with power steering fluid and install them onto the left turn pressure tube.

(b) Using SST, install the left turn pressure tube onto the power steering gear assembly.
SST 09023-38201
Torque: 11.5 N*m (117 kgf*cm, 8 ft.*lbf)
HINT:
- Use a torque wrench with a fulcrum length of 345 mm (13.58 in.).
- This torque value is effective when SST is parallel to the torque wrench.

21. INSTALL STEERING RIGHT TURN PRESSURE TUBE
SST 09023-38201
HINT:
Perform the same procedure on the other side.

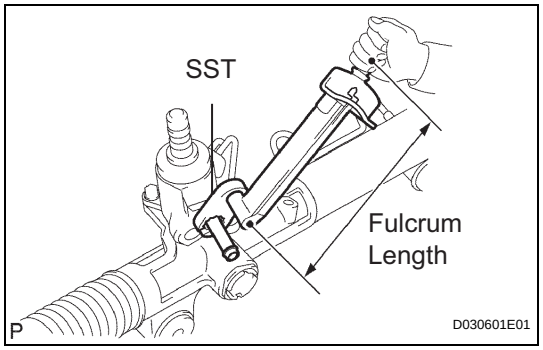

22. INSTALL RETURN TUBE NO.2

(a) Using SST, install the return tube No. 2.
SST 09023-12701
Torque: 22.5 N*m (229 kgf*cm, 17 ft.*lbf)
HINT:
Use a torque wrench with a fulcrum length of 345 mm (13.58 in.).

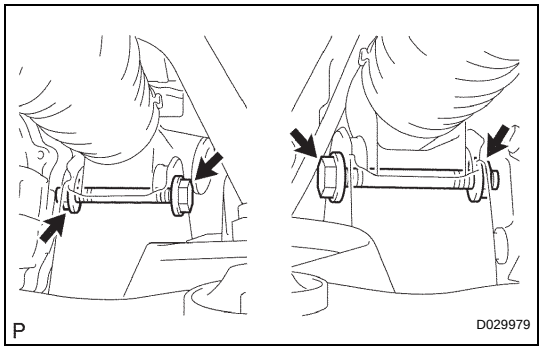

INSTALLATION

1. INSTALL RACK & PINION POWER STEERING GEAR ASSEMBLY

(a) Install the power steering gear assembly with the 2 bolts and nuts.
Torque: 70 N*m (714 kgf*cm, 52 ft.*lbf)

PS

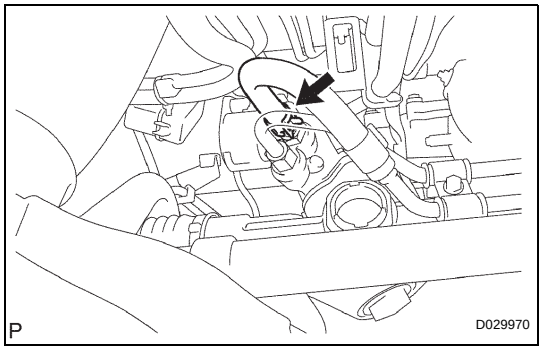

2. CONNECT PRESSURE FEED TUBE ASSEMBLY

(a) Connect the pressure feed tube assembly to the power steering gear assembly.

(b) Install the clip.

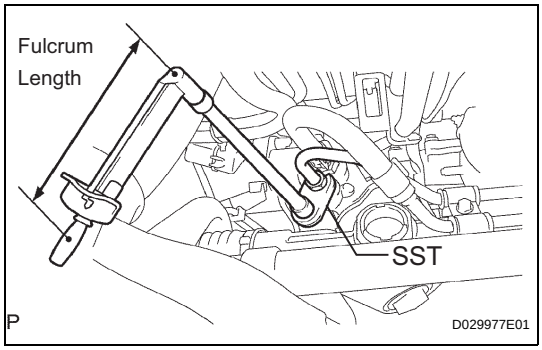

(c) Using SST, connect the return tube assembly to the power steering gear assembly.
SST 09023-12701
Torque: 22.5 N*m (229 kgf*cm, 17 ft.*lbf)
HINT:
- Use a torque wrench with a fulcrum length of 300 mm (11.81 in.).
- This torque value is effective when SST is parallel to the torque wrench.

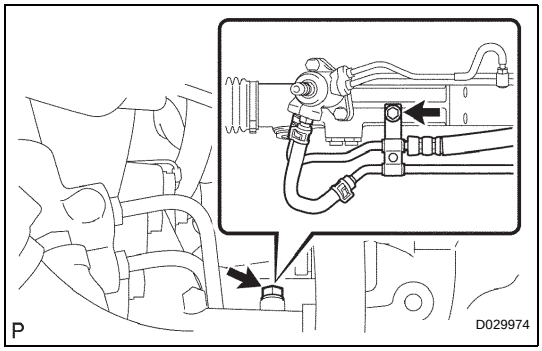

(d) Install the tube clamp with the bolt.
Torque: 9.8 N*m (100 kgf*cm, 87 in.*lbf)

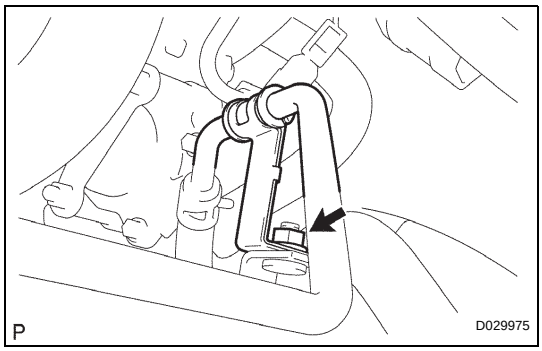

(e) Install the tube clamp with the nut.
Torque: 9.8 N*m (100 kgf*cm, 87 in.*lbf)

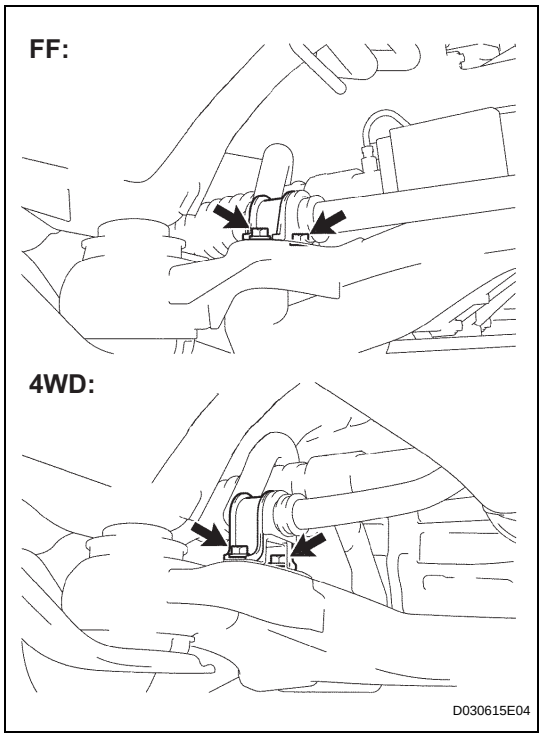

3. INSTALL FRONT STABILIZER BRACKET NO.1 LH

(a) Install the stabilizer bracket No. 1 with the 2 bolts.
Torque: 17 N*m (173 kgf*cm, 12 ft.*lbf)

4. INSTALL FRONT STABILIZER BRACKET NO.1 RH

HINT:
Perform the same procedure on the other side.

5. INSTALL FRONT STABILIZER LINK ASSEMBLY LH

6. INSTALL FRONT STABILIZER LINK ASSEMBLY RH

HINT:
Perform the same procedure on the other side.

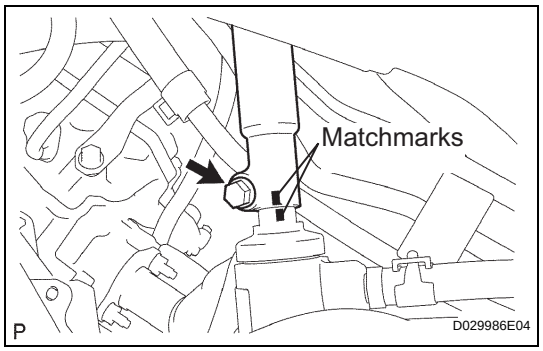

7. INSTALL STEERING INTERMEDIATE SHAFT ASSEMBLY

(a) Align matchmarks on the intermediate shaft assembly and power steering gear assembly.
(b) Install the bolt.
Torque: 36 N*m (367 kgf*cm, 27 ft.*lbf)

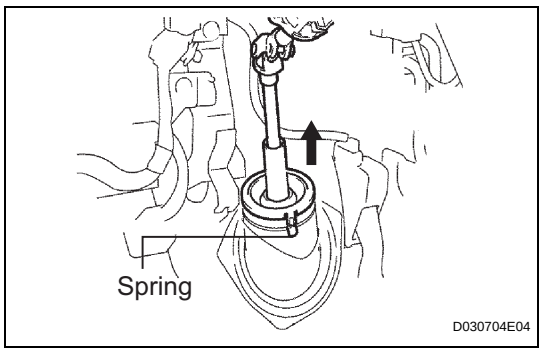

(c) Install the dust cover.
HINT:
Ensure that the springs are installed tightly.

8. INSTALL TIE ROD ASSEMBLY LH

9. INSTALL TIE ROD ASSEMBLY RH

HINT:
Perform the same procedure on the other side.

10. INSTALL FRONT WHEEL
Torque: 103 N*m (1,050 kgf*cm, 76 ft.*lbf)

11. INSPECT CENTER FRONT WHEEL

12. INSPECT STEERING WHEEL CENTER POINT

13. ADD POWER STEERING FLUID

14. BLEED POWER STEERING FLUID

HINT:
(See page PS-6)

15. INSPECT FOR POWER STEERING FLUID LEAK

16. INSPECT AND ADJUST FRONT WHEEL ALIGNMENT

HINT:

(See page SP-4)