POWER STEERING SYSTEM

PRECAUTION

1. HANDLING PRECAUTIONS ON STEERING SYSTEM

(a) Care must be taken when replacing parts. Incorrect replacement could affect the performance of the steering system and result in a driving hazard.

2. HANDLING PRECAUTIONS ON SRS AIRBAG SYSTEM

(a) The vehicle is equipped with SRS (Supplemental Restraint System) such as the driver airbag and front passenger airbag. Failure to carry out service operation in correct sequence could cause the SRS to unexpectedly deploy during servicing, possibly leading to a serious accident. Before servicing (including removal or installation of parts, inspection or replacement), be sure to read the precautionary notice for the supplemental restraint system (See page RS-1).

PROBLEM SYMPTOMS TABLE

HINT:
Use the table below to help determine the cause of the problem. Likely causes of the problem are indicated in descending order. Check each suspected area in order. Repair or replace the faulty parts or perform adjustments as necessary.

PS

POWER STEERING SYSTEM

Symptom	Suspected Area	See page
Hard steering	Tires (Improperly inflated)	TW-2
	Power steering fluid level (Low)	PS-2
	Drive belt (Loose)	-
	Front wheel alignment (Incorrect)	SP-4
	Steering system joints (Worn)	-
	Suspension arm ball joints (Worn)	SP-24
	Steering column (Binding)	SR-6
	Power steering vane pump	PS-9
	Power steering gear	PS-24
Poor return	Tires (Improperly inflated)	TW-2
	Front wheel alignment (Incorrect)	SP-4
	Steering column (Binding)	SR-6
	Power steering gear	PS-24
Excessive play	Steering system joints (Worn)	-
	Suspension arm ball joints (Worn)	SP-24
	Intermediate shaft, Sliding yoke (Worn)	-
	Front wheel bearing (Worn)	AH-5
	Power steering gear	PS-24
Abnormal noise	Power steering fluid level (Low)	PS-2
	Steering system joints (Worn)	-
	Power steering vane pump	PS-9
	Power steering gear	PS-24

Example:

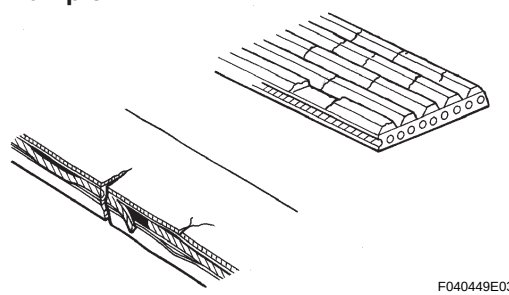

ON-VEHICLE INSPECTION

1. INSPECT DRIVE BELT

(a) Visually check the drive belt for excessive wear, frayed cords, etc.
If any defect is found, replace the drive belt.
HINT:
Cracks on the rib side of a belt are considered acceptable. Replace the belt if there are any missing ribs.

2. CHECK POWER STEERING FLUID LEVEL

(a) Keep the vehicle level.

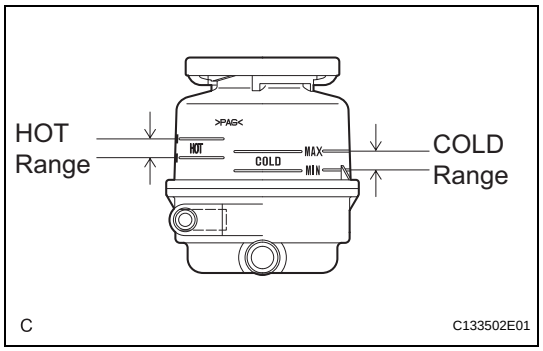

(b) With the engine stopped, check the fluid level in the fluid reservoir.
If necessary, add fluid.
Fluid:
ATF DEXRON II or III, or equivalent
HINT:
If the fluid is hot, check that the fluid level is within the HOT range on the fluid reservoir. If the fluid is cold, check that the fluid level is within the COLD range.

(c) Start the engine and run it at idle.

(d) Turn the steering wheel from lock to lock several times to raise fluid temperature.
Fluid temperature:
75 to 80°C (167 to 176°F)

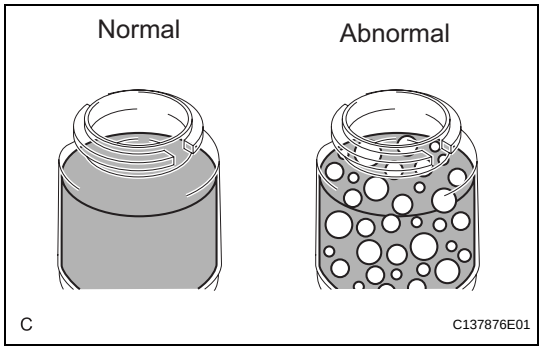

(e) Check for foaming or emulsification.
If foaming or emulsification is identified, bleed the power steering system (See page PS-6).

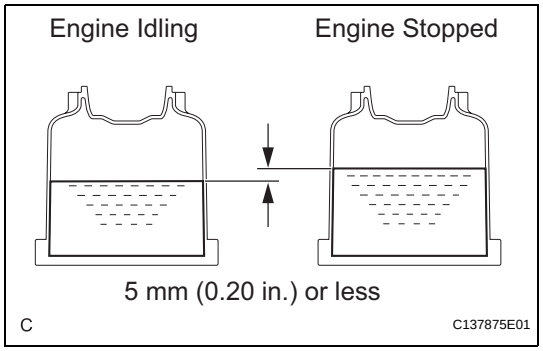

(f) With the engine idling, measure the fluid level in the fluid reservoir.

(g) Stop the engine.

(h) Wait a few minutes and remeasure the fluid level in the fluid reservoir.
Maximum fluid level rise:
5 mm (0.20 in.)
If a problem is found, bleed the power steering system (See page PS-6).

(i) Check the fluid level.

3. INSPECT STEERING FLUID PRESSURE

(a) Disconnect the pressure feed tube assembly from the vane pump assembly (See page PS-9).

PS

PS

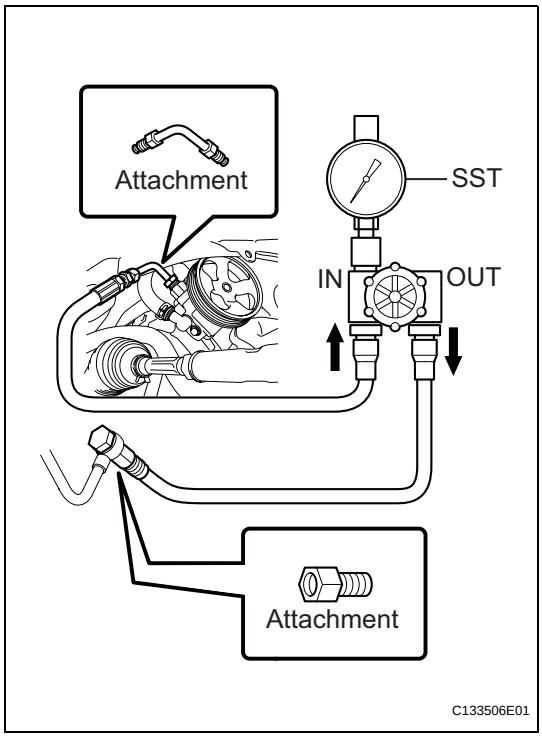

(b) Connect SST as shown in the illustration.
SST 09640-10010 (09641-01010, 09641-01060, 09641-01030)
NOTICE:
Check that the valve of SST is in the open position.

(c) Bleed the power steering system (See page PS-6).

(d) Start the engine and run it at idle.

(e) Turn the steering wheel from lock to lock several times to raise fluid temperature.
Fluid temperature:
75 to 80°C (167 to 176°F)

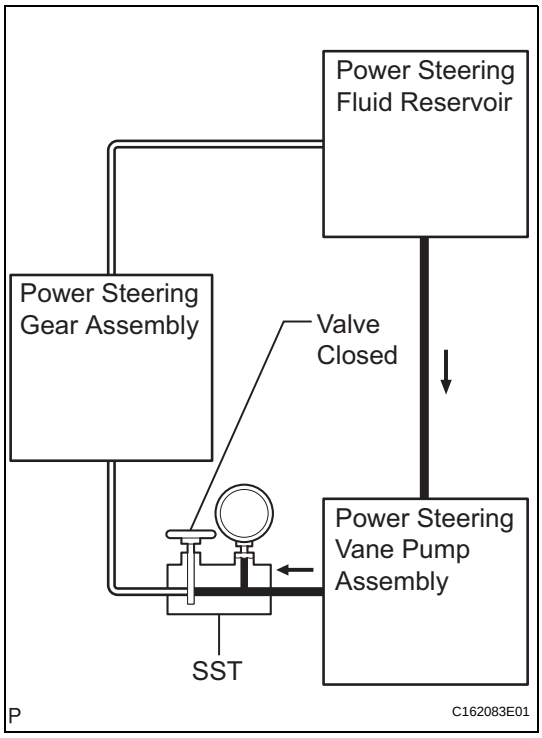

(f) With the engine idling, close the valve of SST and observe the reading on SST.
Standard fluid pressure:
7,800 to 8,300 kPa (79.5 to 84.6 kgf/cm^2, 1,131 to 1,204 psi)
NOTICE:
- **Do not keep the valve closed for more than 10 seconds.**
- **Do not allow the fluid temperature to become too high.**

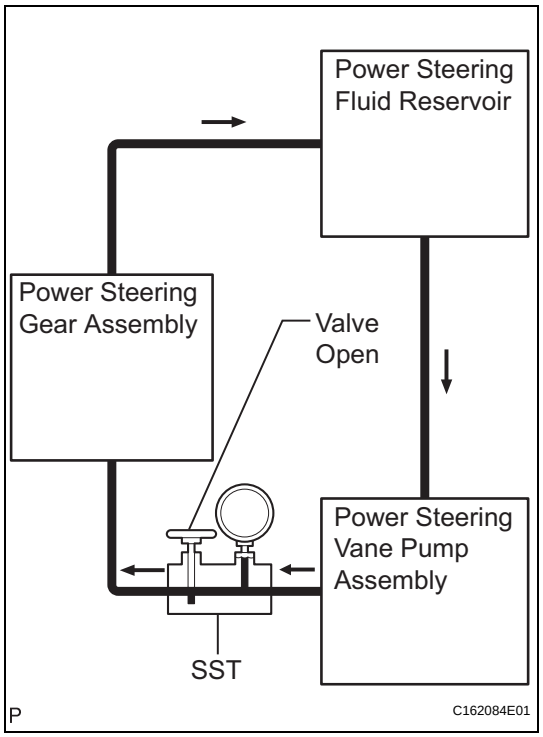

(g) With the engine idling, open the valve fully.
(h) Measure the fluid pressure at engine speeds of 1,000 rpm and 3,000 rpm.
Fluid pressure difference:
490 kPa (5 kgf/cm^2, 71 psi) or less
NOTICE:
Do not turn the steering wheel.

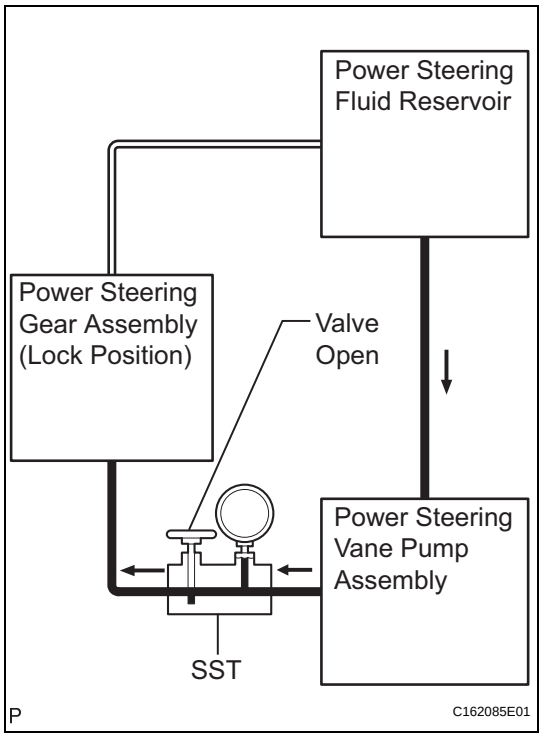

(i) With the engine idling and the valve fully opened, turn the steering wheel left or right to the full lock position. Observe the reading on SST.
Standard fluid pressure:
7,800 to 8,300 kPa (79.5 to 84.6 kgf/cm^2, 1,131 to 1,204 psi)
NOTICE:
- **Do not keep the steering wheel in the full lock position for more than 10 seconds.**
- **Do not allow the fluid temperature to become too high.**

(j) Disconnect SST.
(k) Connect the pressure feed tube assembly to the vane pump assembly (See page PS-19).
(l) Bleed the power steering system (See page PS-6).

4. CHECK STEERING EFFORT

(a) Stop the vehicle on a level, paved surface and turn the wheels straight ahead.
(b) Disconnect the negative (-) battery cable from the battery.
CAUTION:
Wait at least 90 seconds after disconnecting the cable from the negative (-) battery terminal to prevent airbag and seat belt pretensioner activation.
(c) Remove the steering pad (See page RS-423).
(d) Connect the negative (-) battery cable to the battery.
(e) Using a torque wrench, check if the steering wheel set nut is properly tightened.
Torque: 50 N*m (510 kgf*cm, 37 ft.*lbf)
(f) Start the engine and run it at idle.

PS

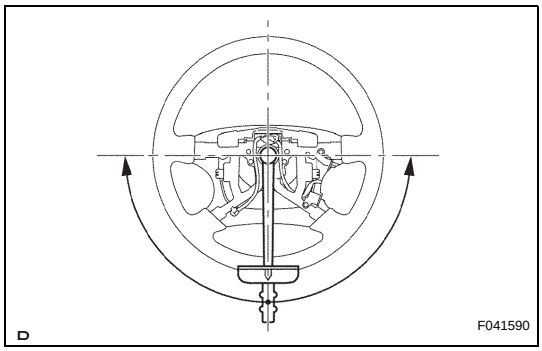

(g) Turn the steering wheel 90 degrees to the right and check steering effort (torque) while turning the wheel. Check the opposite direction in the same manner.
Torque: Steering effort (Reference)
6.0 N*m (61 kgf*cm, 53 in.*lbf)
HINT:
Check the tire type, pressure, and the road surface before making your diagnosis.
(h) Disconnect the negative (-) battery cable from the battery.
(i) Tighten the steering wheel set nut.
Torque: 50 N*m (510 kgf*cm, 37 ft.*lbf)
(j) Install the steering pad (See page RS-424).
(k) Connect the negative (-) battery cable to the battery.
(l) Clear the DTCs (See page RS-35).
(m) Inspect the airbag warning light (See page RS-27).