RACK AND PINION POWER STEERING GEAR

COMPONENTS

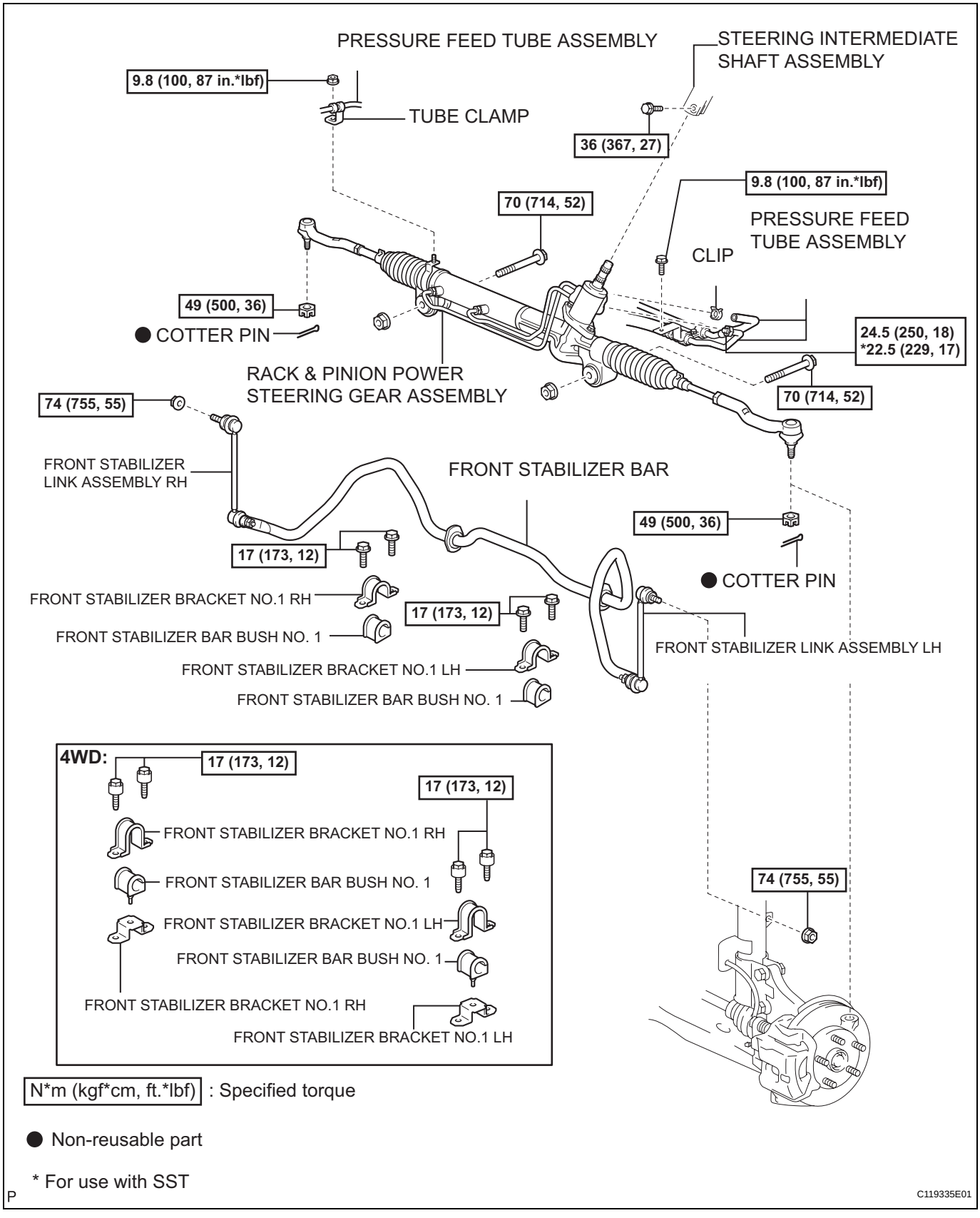

PS

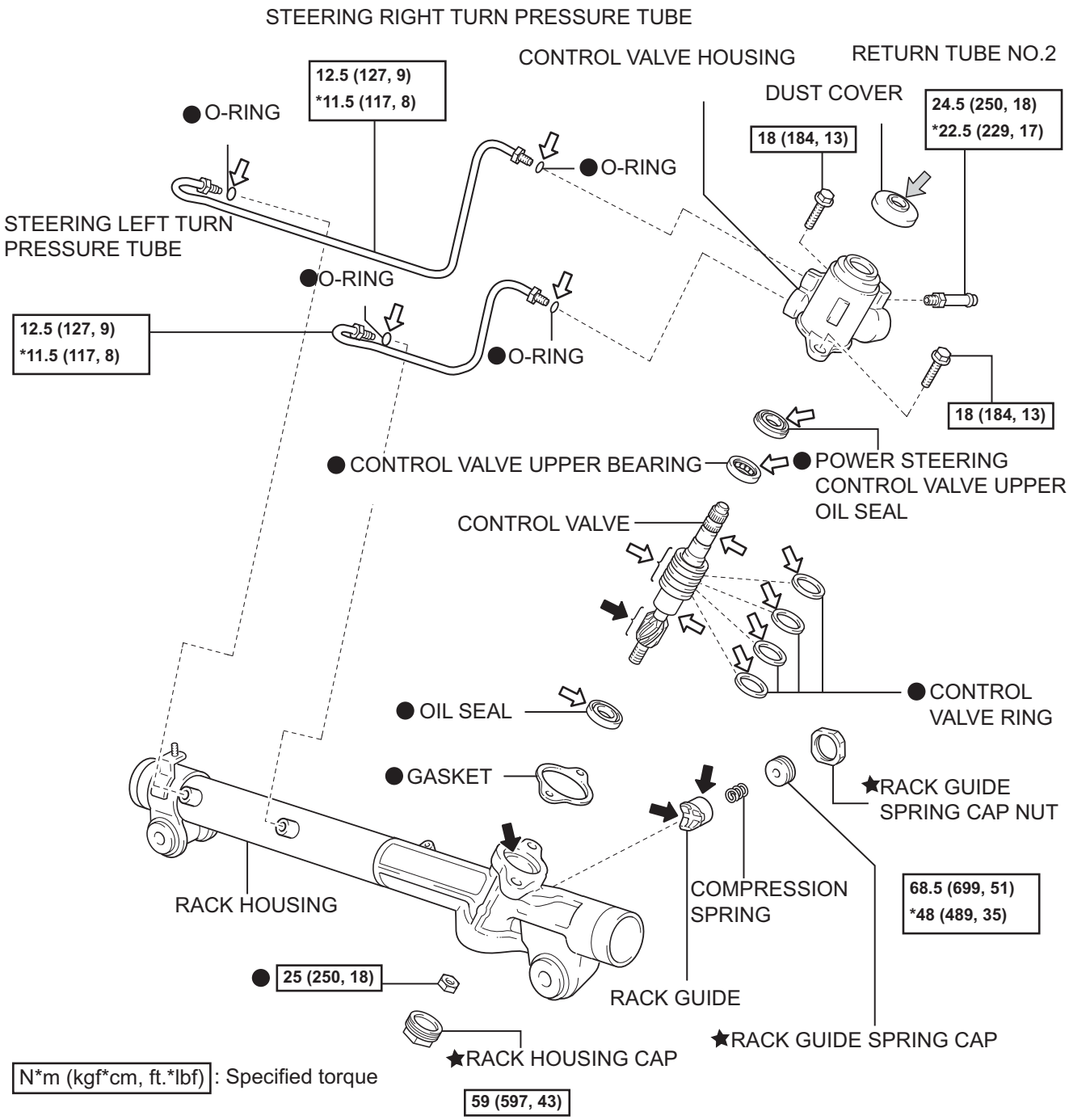

N*m (kgf*cm, ft.*lbf) : Specified torque

● Non-reusable part

★ Precoated part

⬅ Molybdenum disulfide lithium base grease

⇦ Power steering fluid

⇦ MP grease

*For use with SST

P

C119336E01

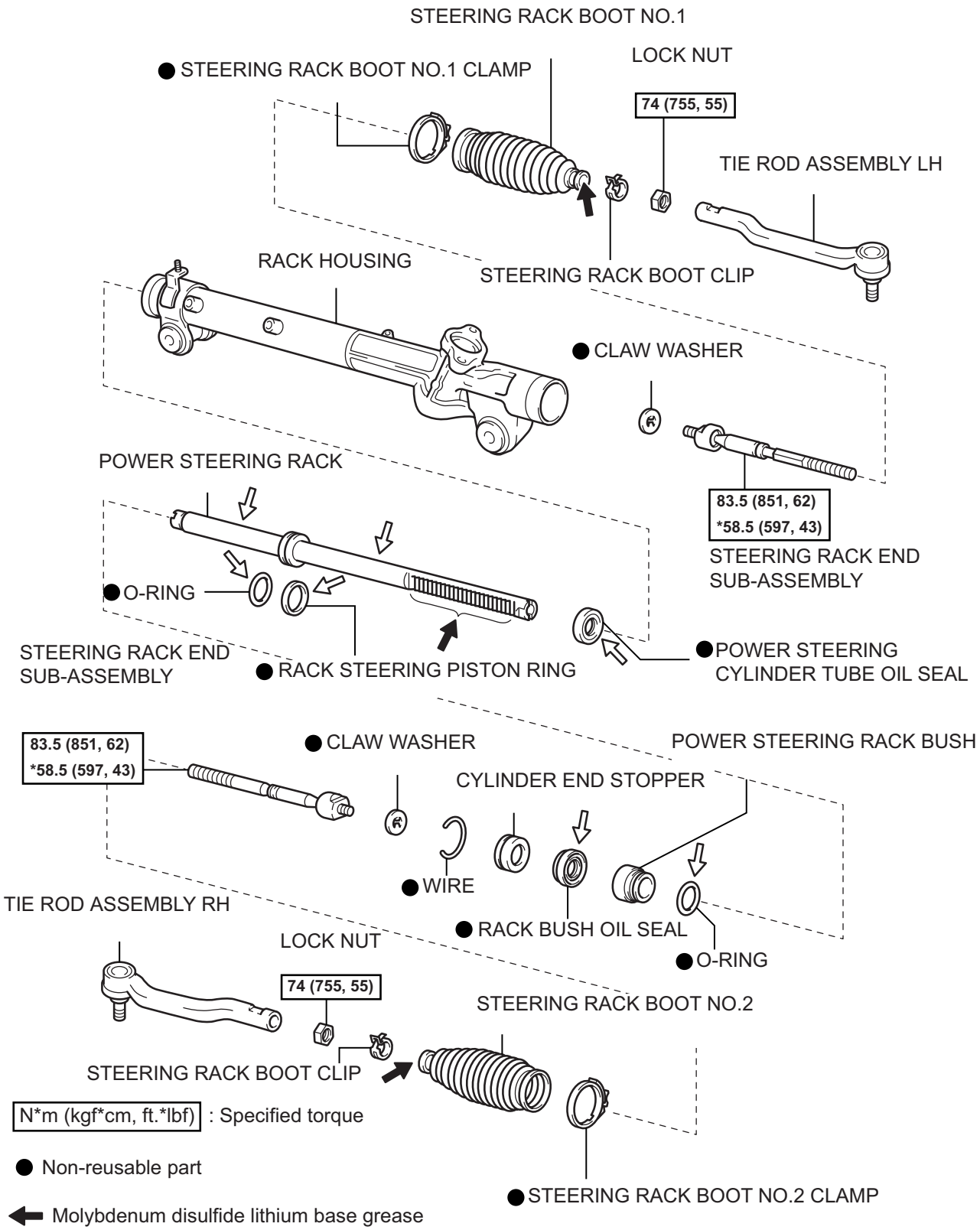

H

C119337E01