DTC	B1446/46	Air Mix Damper Control Servo Motor Circuit (Driver Side)

DESCRIPTION

The air mix control servo motor (air mix damper servo sub-assembly) is controlled by the A/C amplifier. The air mix control servo motor moves the air mix damper by rotating (normal, reverse) with electrical power from the A/C amplifier.

This adjusts the mix ratio of the air that passes through the evaporator and heater core and controls the air flow temperature. Air flow temperature changes when moving the air mix damper to the target point. The target point can be detected by the air mix damper position sensor.

DTC No.	DTC Detection Condition	Trouble Area
B1446/46	Air mix damper position sensor value does not change even if A/C amplifier operates air mix control servo motor.	• Air mix control servo motor • Harness or connector between air mix control servo motor and A/C amplifier • A/C amplifier

WIRING DIAGRAM

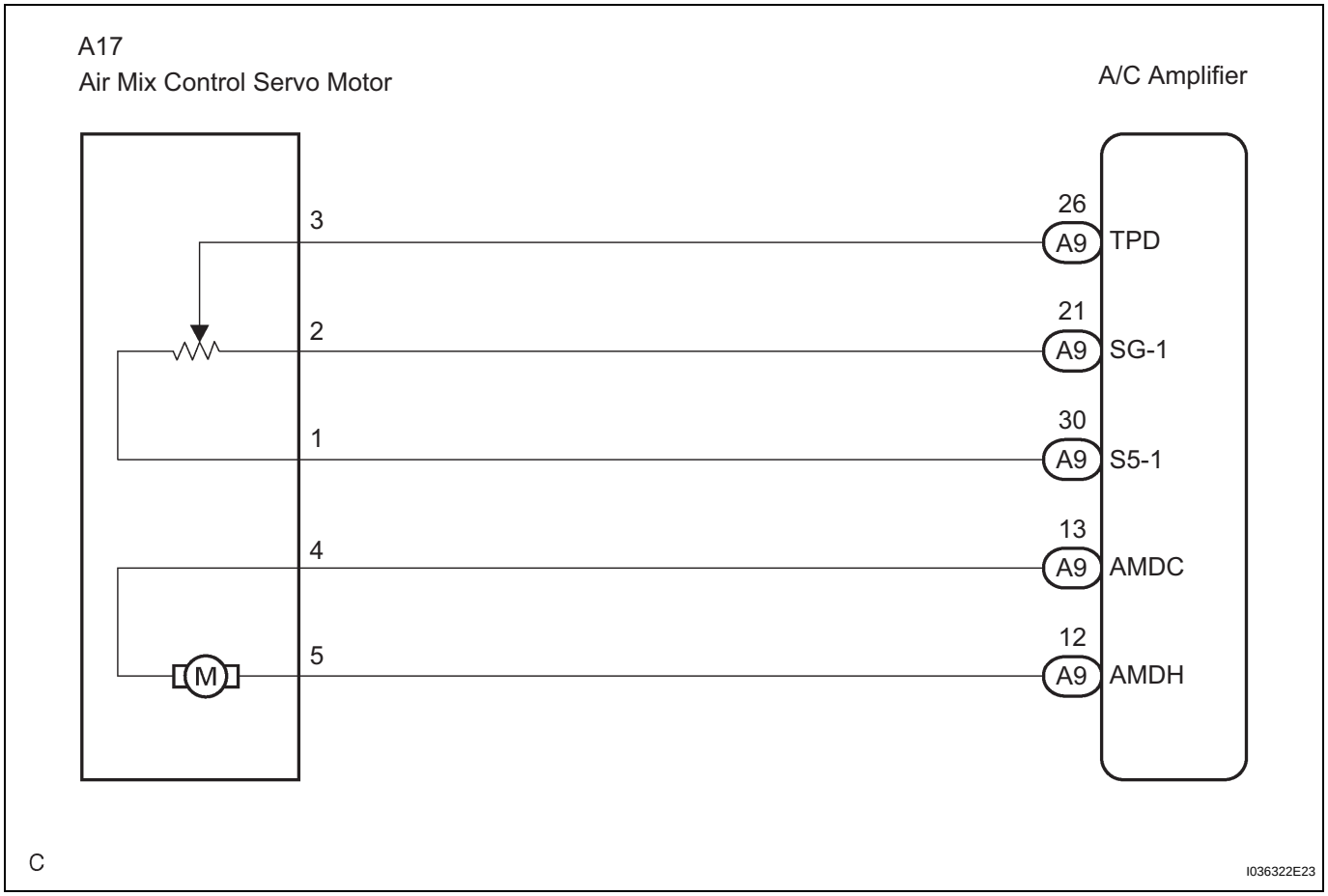

INSPECTION PROCEDURE

1	READ VALUE OF INTELLIGENT TESTER

(a) Connect the intelligent tester to the DLC3.

(b) Turn the ignition switch to the ON position and turn the intelligent tester main switch on.
(c) Select the items below in the DATA LIST, and read the display on the intelligent tester.

DATA LIST / AIR CONDITIONER

Tester Display	Measurement Item/Range	Normal Condition	Diagnostic Note
A/M DAMP POS-D	Air mix damper position (Driver side) / min.: -14%, max.: 113.5%	Damper is at "MAX. COOL": -5% Damper is at "MAX. HOT": 105%	-
A/M DAMP TARG-D	Air mix damper target position (Driver side) / min.: -14%, max.: 113.5%		

AC

OK:
When the target position is "MAX. COOL" (-5%), the actual opening angle is 19.0% or less.
When the target position is "MAX. HOT" (105%), the actual opening angle is 81.0% or more.

Result

Result	Proceed to
NG	A
OK (When troubleshooting according to the PROBLEM SYMPTOM TABLE)	B
OK (When troubleshooting according to the DTC)	C

B → **PROCEED TO NEXT CIRCUIT INSPECTION SHOWN IN PROBLEM SYMPTOMS TABLE**

C → **REPLACE A/C AMPLIFIER**

A

2 PERFORM ACTIVE TEST BY INTELLIGENT TESTER

(a) Connect the intelligent tester to the DLC3.
(b) Turn the ignition switch to the ON position and turn the intelligent tester main switch on.
(c) Select the item below in the ACTIVE TEST and then check the air flow temperature by hand.

ACTIVE TEST / AIR CONDITIONER

Tester Display	Test Part	Control Range	Diagnostic Note
AIR MIX DAMP-D	Air mix damper (Driver side)	min.: -14%, max.: 113.5%	-

OK:
When the lever is moved to the "MAX. HOT" side, warm air comes out.
When the lever is moved to the "MAX. COOL" side, cool air comes out.

Result

Result	Proceed to
NG	A
OK (When troubleshooting according to the PROBLEM SYMPTOM TABLE)	B
OK (When troubleshooting according to the DTC)	C

B → **PROCEED TO NEXT CIRCUIT INSPECTION SHOWN IN PROBLEM SYMPTOMS TABLE**

C → **REPLACE A/C AMPLIFIER**

A

3	PERFORM ACTUATOR CHECK

(a) Enter the actuator check mode (See page AC-15).
(b) Press the DEF switch and change to the step operation.
(c) Check the air flow temperature by hand.

Display Code	Air Mix Damper Operation
0	"COOL" side (-5%)
1	"COOL" side (-5%)
2	"COOL" side (-5%)
3	"COOL" side (-5%)
4	"COOL"/"HOT" (50% opened)
5	"COOL"/"HOT" (50% opened)
6	"HOT" side (105%)
7	"HOT" side (105%)
8	"HOT" side (105%)
9	"HOT" side (105%)

OK:
Air flow temperature changes in accordance with each display code.

Result

Result	Proceed to
NG	A
OK (When troubleshooting according to the PROBLEM SYMPTOM TABLE)	B
OK (When troubleshooting according to the DTC)	C

B → **PROCEED TO NEXT CIRCUIT INSPECTION SHOWN IN PROBLEM SYMPTOMS TABLE**

C → **REPLACE A/C AMPLIFIER**

A

4	**INSPECT AIR MIX CONTROL SERVO MOTOR**

Component without harness connected:
(Air Mix Control Servo Motor)

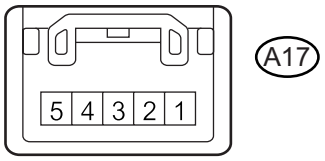

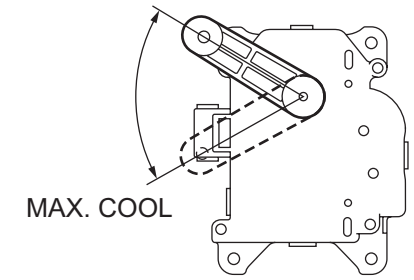

H

E109269E10

(a) Remove the air mix control servo motor.
(b) Disconnect the connector from the air mix control servo motor.
(c) Connect the positive (+) lead from the battery to terminal 5 and the negative (-) lead to terminal 4, then check that the lever turns to the "MAX. HOT" position smoothly.
OK:
Lever turns to "MAX. HOT" position smoothly.
(d) Connect the positive (+) lead from the battery to terminal 4 and the negative (-) lead to terminal 5, then check that the lever turns to the "MAX. COOL" position smoothly.
OK:
Lever turns to "MAX. COOL" position smoothly.

NG → **REPLACE AIR MIX CONTROL SERVO MOTOR**

OK

5	**CHECK HARNESS AND CONNECTOR (AIR MIX CONTROL SERVO MOTOR - A/C AMPLIFIER)**

Front view of wire harness connector:
(to Air Mix Control Servo Motor)

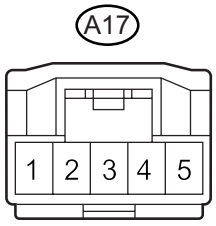

E145121E12

(a) Disconnect the connector from the A/C amplifier.

Front view of wire harness connector:
(to A/C Amplifier)

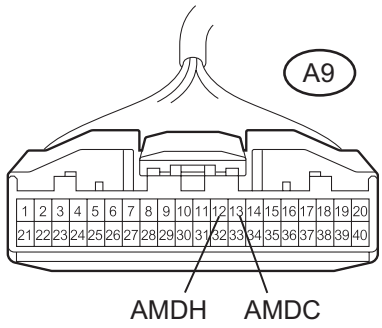

H

E143742E39

(b) Measure the resistance according to the value(s) in the table below.

Standard resistance

Tester Connection	Condition	Specified Condition
A9-13 (AMDC) - A17-4	Always	Below 1 Ω
A9-12 (AMDH) - A17-5	Always	Below 1 Ω
A9-13 (AMDC) - Body ground	Always	10 kΩ or higher
A9-12 (AMDH) - Body ground	Always	10 kΩ or higher

AC

NG → **REPAIR OR REPLACE HARNESS OR CONNECTOR**

OK

REPLACE A/C AMPLIFIER