DTC	B1449/49	Rear Air Outlet Damper Control Servo Motor Circuit

DESCRIPTION

This circuit turns the servo motor and changes each damper position by receiving the signals from the A/C amplifier.

The rear air outlet damper servo motor switches the air outlet mode by rotating (normal, reverse) with electrical power from the A/C amplifier.

DTC No.	DTC Detection Condition	Trouble Area
B1449/49	Rear air outlet damper position sensor value does not change even if A/C amplifier operates rear air outlet control servo motor.	• Rear air outlet control servo motor • Harness or connector between rear air outlet control servo motor and A/C amplifier • A/C amplifier

WIRING DIAGRAM

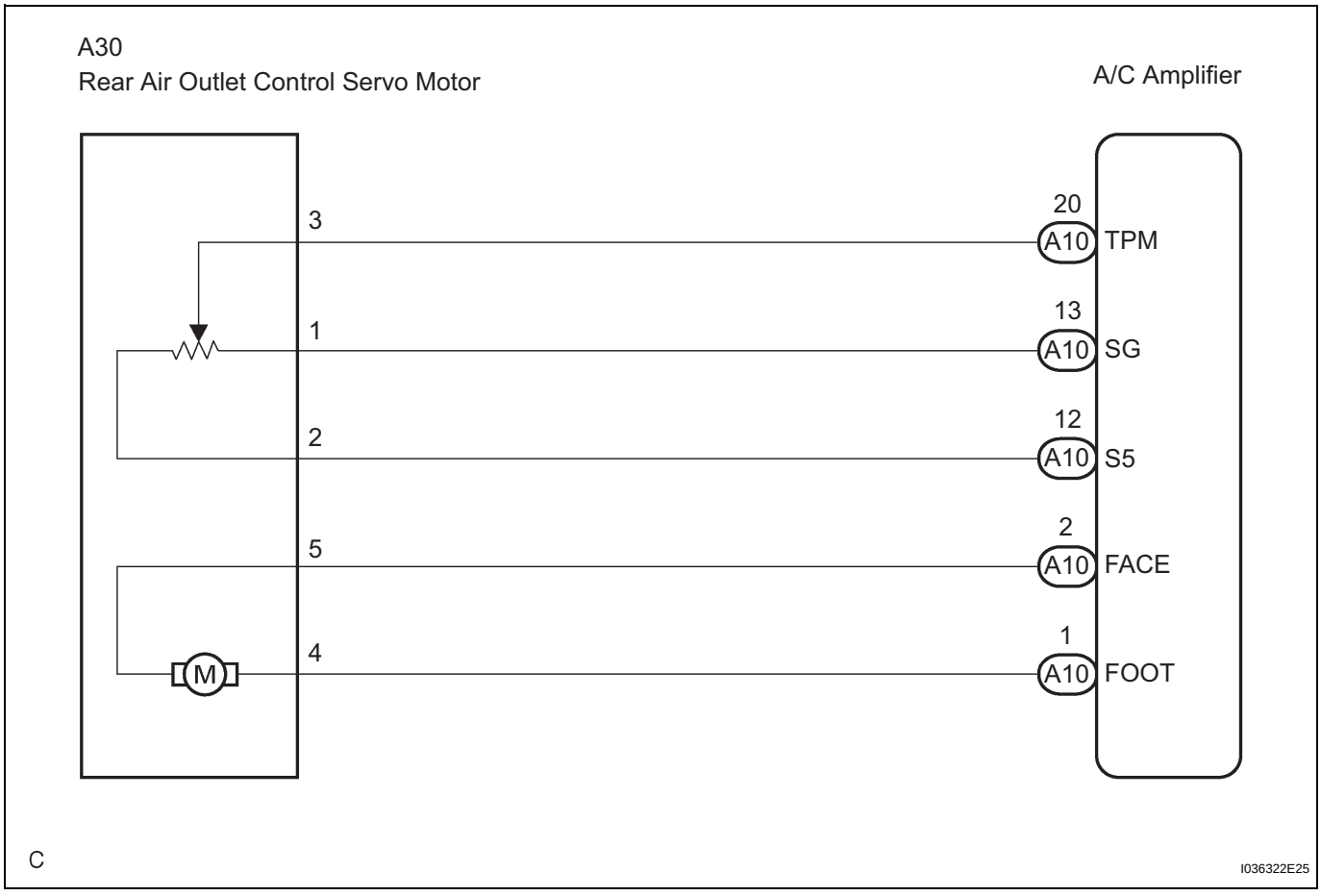

INSPECTION PROCEDURE

1	READ VALUE OF INTELLIGENT TESTER

(a) Connect the intelligent tester to the DLC3.
(b) Turn the ignition switch to the ON position and turn the intelligent tester main switch on.

(c) Select the items below in the DATA LIST, and read the display on the intelligent tester.

DATA LIST / AIR CONDITIONER

Tester Display	Measurement Item/Range	Normal Condition	Diagnostic Note
A/O DAMP POS-R	Air outlet mode damper position (Rear) / min.: -14%, max.: 113.5%	Damper is at "FACE1": 0% Damper is at "FACE2": 16.5% Damper is at "FACE/FOOT": 44% Damper is at "FOOT": 100%	Open in the circuit: 50.0%
A/O DAMP TARG-R	Air outlet mode damper target position (Rear) / min.: -14%, max.: 113.5%		

AC

OK:

When the target position is "FACE1" (0%), the actual opening angle is 19.0% or less.
When the target position is "FOOT" (100%), the actual opening angle is 81.0% or more.

Result

Result	Proceed to
NG	A
OK (When troubleshooting according to the PROBLEM SYMPTOMS TABLE)	B
OK (When troubleshooting according to the DTC)	C

B → **PROCEED TO NEXT CIRCUIT INSPECTION SHOWN IN PROBLEM SYMPTOMS TABLE**

C → **REPLACE A/C AMPLIFIER**

A

2 PERFORM ACTIVE TEST BY INTELLIGENT TESTER

(a) Connect the intelligent tester to the DLC3.
(b) Turn the ignition switch to the ON position and turn the intelligent tester main switch on.
(c) Select the item below in the ACTIVE TEST and then check the air flow position by hand.

ACTIVE TEST / AIR CONDITIONER

Tester Display	Test Part	Control Range	Diagnostic Note
A/O MODE DAMP-R	Air outlet damper position (Rear)	min.: -14%, max.: 113.5%	-

OK:

Air comes out from the selected air outlet.

Result

Result	Proceed to
NG	A
OK (When troubleshooting according to the PROBLEM SYMPTOMS TABLE)	B
OK (When troubleshooting according to the DTC)	C

B → **PROCEED TO NEXT CIRCUIT INSPECTION SHOWN IN PROBLEM SYMPTOMS TABLE**

C → **REPLACE A/C AMPLIFIER**

A

3	PERFORM ACTUATOR CHECK

(a) Warm up the engine.
(b) Enter the actuator check mode (See page AC-15).
(c) Press the DEF switch and change to step operation.
(d) Press the DEF switch and check the air flow by hand.

Display Code	Air flow condition
0	FACE1 (0%)
1	FACE1 (0%)
2	FACE1 (0%)
3	FACE2 (16.5%)
4	FACE/FOOT (44%)
5	FACE/FOOT (44%)
6	FACE/FOOT (44%)
7	FOOT (100%)
8	FOOT (100%)
9	FOOT (100%)

OK:

Air outlet mode changes in accordance with each display code.

Result

Result	Proceed to
NG	A
OK (When troubleshooting according to the PROBLEM SYMPTOMS TABLE)	B
OK (When troubleshooting according to the DTC)	C

B → PROCEED TO NEXT CIRCUIT INSPECTION SHOWN IN PROBLEM SYMPTOMS TABLE

C → REPLACE A/C AMPLIFIER

A

4	**INSPECT REAR AIR OUTLET CONTROL SERVO MOTOR**

Component without harness connected:
(Rear Air Outlet Control Servo Motor)

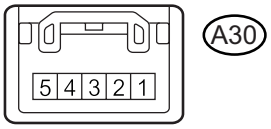

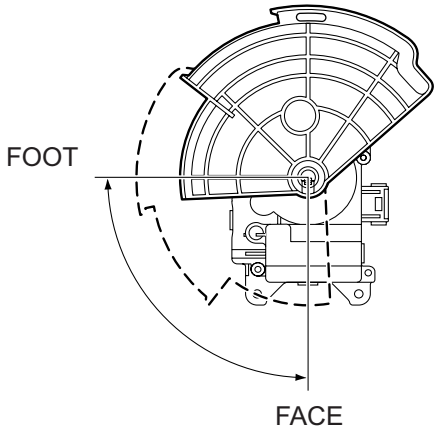

H

E145190E02

(a) Remove the rear air outlet control servo motor.
(b) Disconnect the connector from the rear air outlet control servo motor.
(c) Connect the positive (+) lead from the battery to terminal 4 and the negative (-) lead to terminal 5, then check that the lever turns to the "FOOT" position smoothly.
OK:
Lever turns to "FOOT" position smoothly.
(d) Connect the positive (+) lead from the battery to terminal 5 and the negative (-) lead to terminal 4, then check that the lever turn to the "FACE" position smoothly.
OK:
Lever turns to "FACE" position smoothly.

NG → **REPLACE REAR AIR OUTLET CONTROL SERVO MOTOR**

OK

5	**CHECK HARNESS AND CONNECTOR (REAR AIR OUTLET CONTROL SERVO MOTOR - A/C AMPLIFIER)**

Front view of wire harness connector:
(to Rear Air Outlet Control Servo Motor)

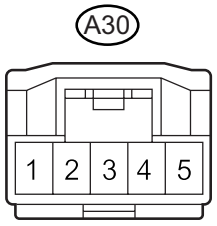

E145121E14

(a) Disconnect the connector from the A/C amplifier.

Front view of wire harness connector:
(to A/C Amplifier)

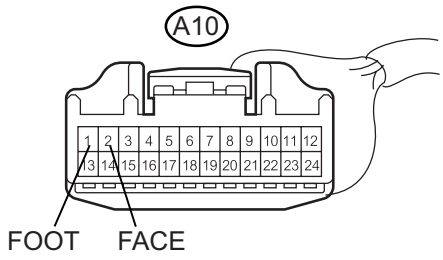

E141047E12

(b) Measure the resistance according to the value(s) in the table below.

Standard resistance

Tester Connection	Condition	Specified Condition
A10-2 (FACE) - A30-5	Always	Below 1 Ω
A10-1 (FOOT) - A30-4	Always	Below 1 Ω
A10-2 (FACE) - Body ground	Always	10 kΩ or higher
A10-1 (FOOT) - Body ground	Always	10 kΩ or higher

AC

NG → **REPAIR OR REPLACE HARNESS OR CONNECTOR**

OK

REPLACE A/C AMPLIFIER