DTC	B1499/99	Multiplex Communication Circuit

DESCRIPTION

DTC No.	DTC Detection Condition	Trouble Area
B1499/99	• Open in CAN communication circuit • Open in multiplex communication system	• CAN communication system • Multiplex communication system

INSPECTION PROCEDURE

1	GO TO CAN COMMUNICATION SYSTEM

(a) Refer to the CAN communication system (See page CA-7).
(b) If the CAN communication system is operating normally, proceed to the next step.

NEXT

2	GO TO MULTIPLEX COMMUNICATION SYSTEM (BEAN)

(a) Refer to the multiplex communication system (See page MP-4).

NEXT

END

Blower Motor Circuit

DESCRIPTION

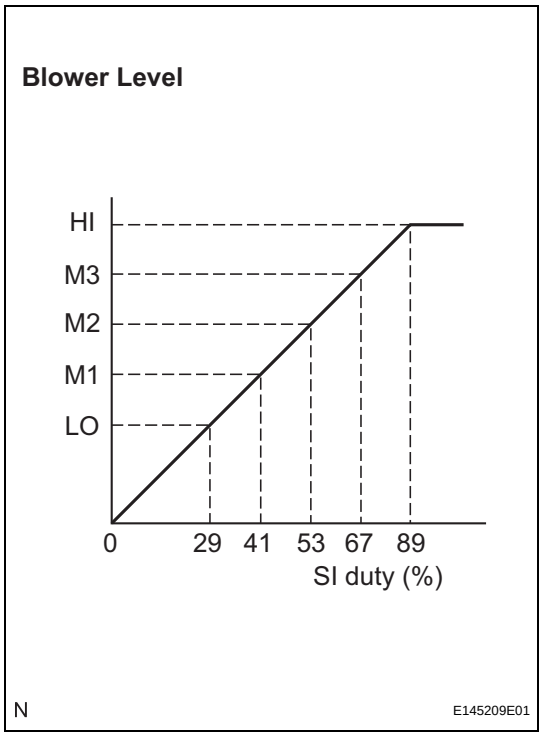

The blower motor is operated by signals from the A/C amplifier. Blower motor speed signals are transmitted by changes in the Duty Ratio.

Duty Ratio

The duty ratio is the ratio of the period of continuity in one cycle. For example, if A is the period of continuity in one cycle, and B is the period of non-continuity, then Duty Ratio = A/(A+B) x 100 (%).

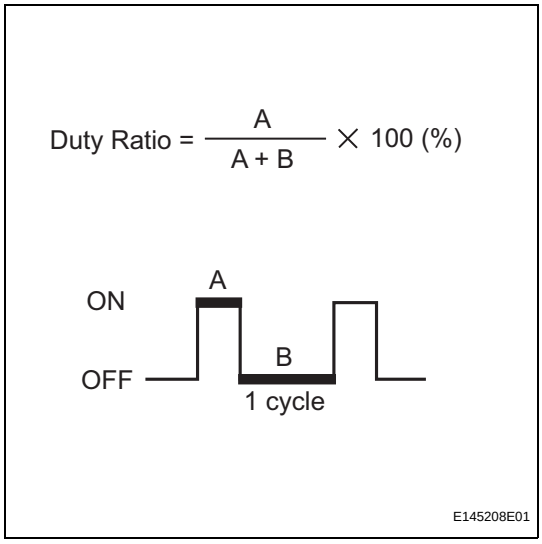

WIRING DIAGRAM

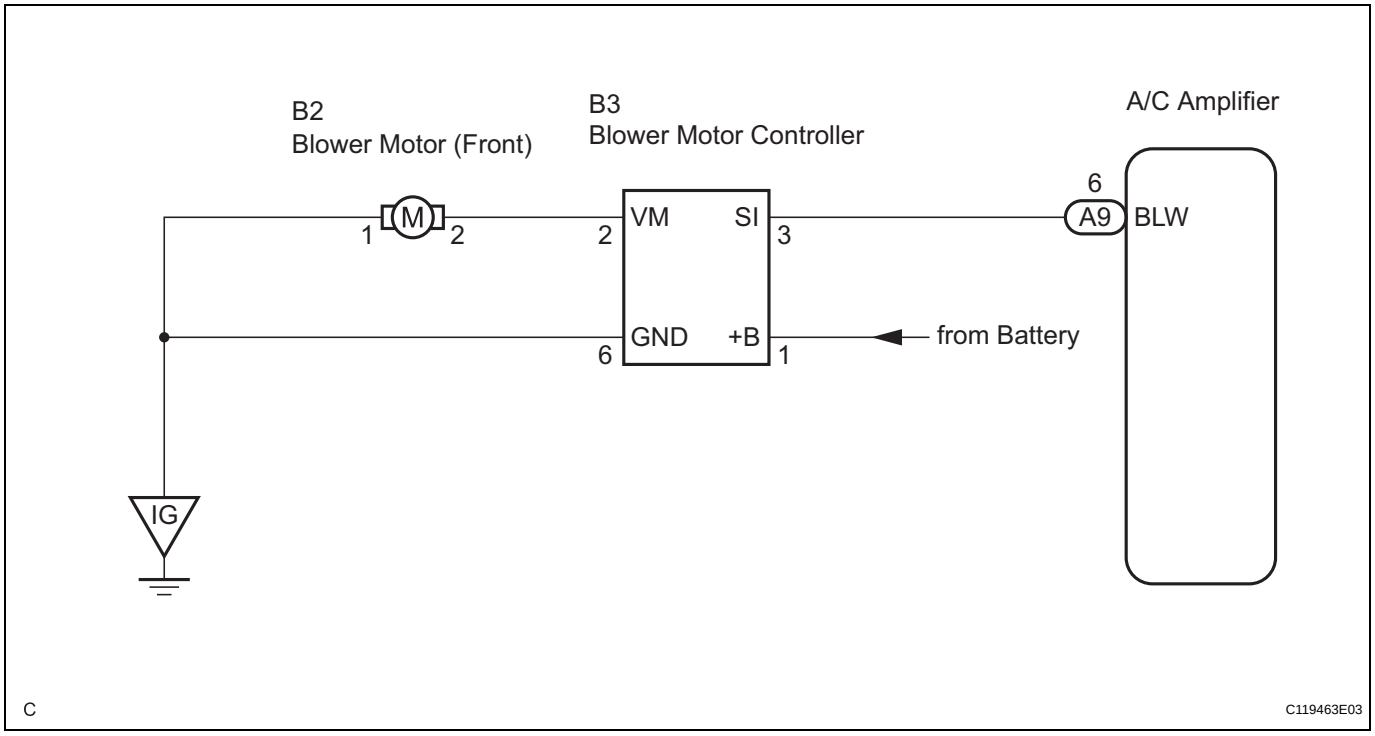

AC

INSPECTION PROCEDURE

1	READ VALUE OF INTELLIGENT TESTER

(a) Connect the intelligent tester to the DLC3.
(b) Turn the ignition switch to the ON position and turn the intelligent tester main switch on.
(c) Select the item below in the DATA LIST, and read the display on the intelligent tester.

DATA LIST / AIR CONDITIONER

Tester Display	Measurement Item/Range	Normal Condition	Diagnostic Note
BLOWER LEVEL	Blower motor speed level / min.: Level 0, max.: Level 31	Changes depending on blower level	-

OK:
The display is as specified in the normal condition column.

NG → **Go to step 2**

OK

PROCEED TO NEXT CIRCUIT INSPECTION SHOWN IN PROBLEM SYMPTOMS TABLE

2	PERFORM ACTIVE TEST BY INTELLIGENT TESTER

(a) Connect the intelligent tester to the DLC3.
(b) Turn the ignition switch to the ON position and turn the intelligent tester main switch on.

(c) Select the item below in the ACTIVE TEST and then check that the blower motor operates.

ACTIVE TEST / AIR CONDITIONER

Tester Display	Test Part	Control Range	Diagnostic Note
BLOWER LEVEL	Blower motor speed level	min.: Level 0, max.: Level 31	-

OK:

The blower motor operates and the blower level changes.

NG → **Go to step 3**

OK

PROCEED TO NEXT CIRCUIT INSPECTION SHOWN IN PROBLEM SYMPTOMS TABLE

3 PERFORM ACTUATOR CHECK

(a) Enter the actuator check mode (See page AC-15).
(b) Press the DEF switch to change to the step operation.
(c) Check the air flow level by hand.

Display Code	Blower Level
0	0
1	1
2	17
3	17
4	17
5	17
6	17
7	17
8	17
9	31

OK:

The blower level changes in accordance with each display code.

NG → **Go to step 4**

OK

PROCEED TO NEXT CIRCUIT INSPECTION SHOWN IN PROBLEM SYMPTOMS TABLE

4	INSPECT BLOWER MOTOR

Component without harness connected:
(Blower Motor)

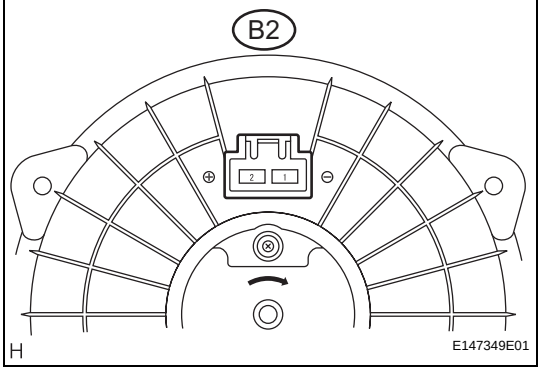

(a) Remove the blower motor.
(b) Disconnect the connector from the blower motor.
(c) Connect the positive (+) lead from the battery to terminal 2 and the negative (-) lead to terminal 1, and check that the motor operates.
OK:
Blower motor operates smoothly.

AC

NG → **REPLACE BLOWER MOTOR**

OK

5	CHECK HARNESS AND CONNECTOR (BLOWER MOTOR - BLOWER MOTOR CONTROLLER)

Front view of wire harness connector:
(to Blower Motor)

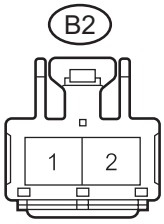

(to Blower Motor Controller)

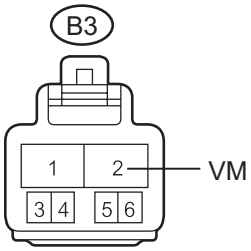

E147584E01

(a) Disconnect the connector from the blower motor.
(b) Disconnect the connector from the blower motor controller.
(c) Measure the resistance according to the value(s) in the table below.
Standard resistance

Tester Connection	Condition	Specified Condition
B2-2 - B3-2 (VM)	Always	Below 1 Ω
B2-2 - Body ground	Always	10 kΩ or higher

NG → **REPAIR OR REPLACE HARNESS OR CONNECTOR**

OK

6 CHECK HARNESS AND CONNECTOR (BLOWER MOTOR - BODY GROUND)

Front view of wire harness connector:
(to Blower Motor)

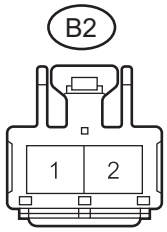

E145472E02

(a) Measure the resistance according to the value(s) in the table below.
Standard resistance

Tester Connection	Condition	Specified Condition
B2-1 - Body ground	Always	Below 1 Ω

NG → **REPAIR OR REPLACE HARNESS OR CONNECTOR**

OK

7 CHECK HARNESS AND CONNECTOR (BLOWER MOTOR CONTROLLER - BODY GROUND)

Front view of wire harness connector:
(to Blower Motor Controller)

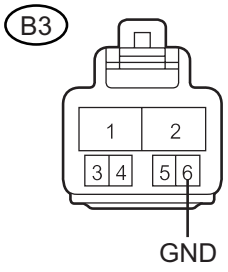

H

E147376E01

(a) Measure the resistance according to the value(s) in the table below.
Standard resistance

Tester Connection	Condition	Specified Condition
B3-6 (GND) - Body ground	Always	Below 1 Ω

NG → **REPAIR OR REPLACE HARNESS OR CONNECTOR**

OK

8 CHECK HARNESS AND CONNECTOR (BLOWER MOTOR CONTROLLER - BATTERY)

Front view of wire harness connector:
(to Blower Motor Controller)

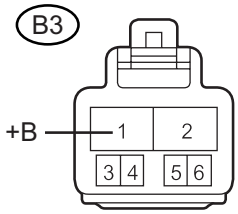

H E147376E02

(a) Measure the voltage according to the value(s) in the table below.
Standard voltage

Tester Connection	Condition	Specified Condition
B3-1 (+B) - Body ground	Always	11 to 14 V

NG → **REPAIR OR REPLACE HARNESS OR CONNECTOR**

OK

9 CHECK HARNESS AND CONNECTOR (A/C AMPLIFIER - BLOWER MOTOR CONTROLLER)

Front view of wire harness connector:
(to A/C Amplifier)

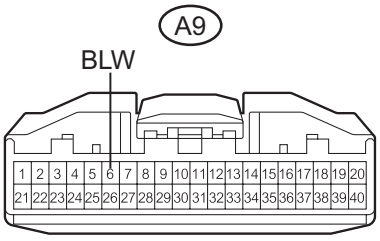

(to Blower Motor Controller)

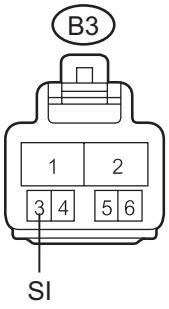

E147585E01

(a) Disconnect the connector from the A/C amplifier.
(b) Measure the resistance according to the value(s) in the table below.
Standard resistance

Tester Connection	Condition	Specified Condition
A9-6 (BLW) - B3-3 (SI)	Always	Below 1 Ω
A9-6 (BLW) - Body ground	Always	10 kΩ or higher

NG → **REPAIR OR REPLACE HARNESS OR CONNECTOR**

AC

OK

10	**INSPECT A/C AMPLIFIER**

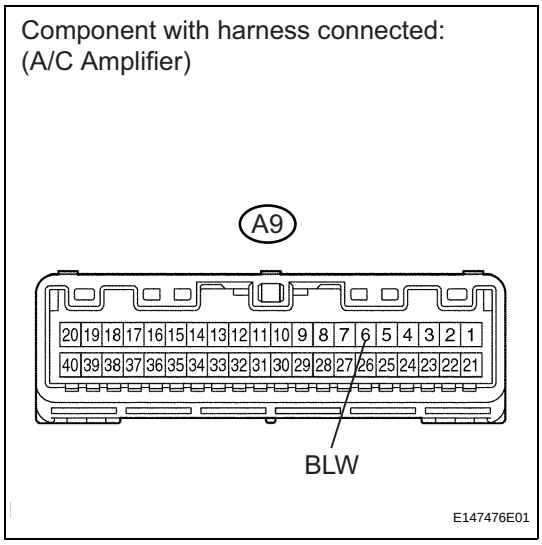

(a) Reconnect the connector to the A/C amplifier.
(b) Reconnect the connector to the blower motor controller.
(c) Reconnect the connector to the blower motor.

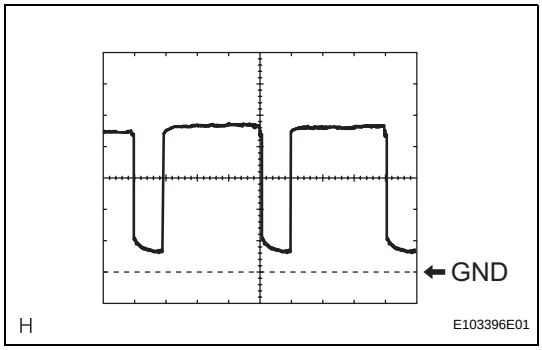

(d) Measure the waveform between terminal A9-6 (BLW) of the A/C amplifier and body ground.
OK:
Waveform is as shown in the illustration.
HINT:
Waveform varies with the blower level.

Item	Contents
Tool Setting	1 V/DIV., 500 μs/DIV.
Vehicle Condition	Ignition switch: ON Blower switch: LO

NG → **REPAIR OR REPLACE HARNESS OR CONNECTOR**

OK

REPLACE BLOWER MOTOR CONTROLLER