Rear Air Conditioning Relay Circuit

DESCRIPTION

The RR A/C relay is switched on by signals from the A/C amplifier. It supplies power to the rear blower motor.

WIRING DIAGRAM

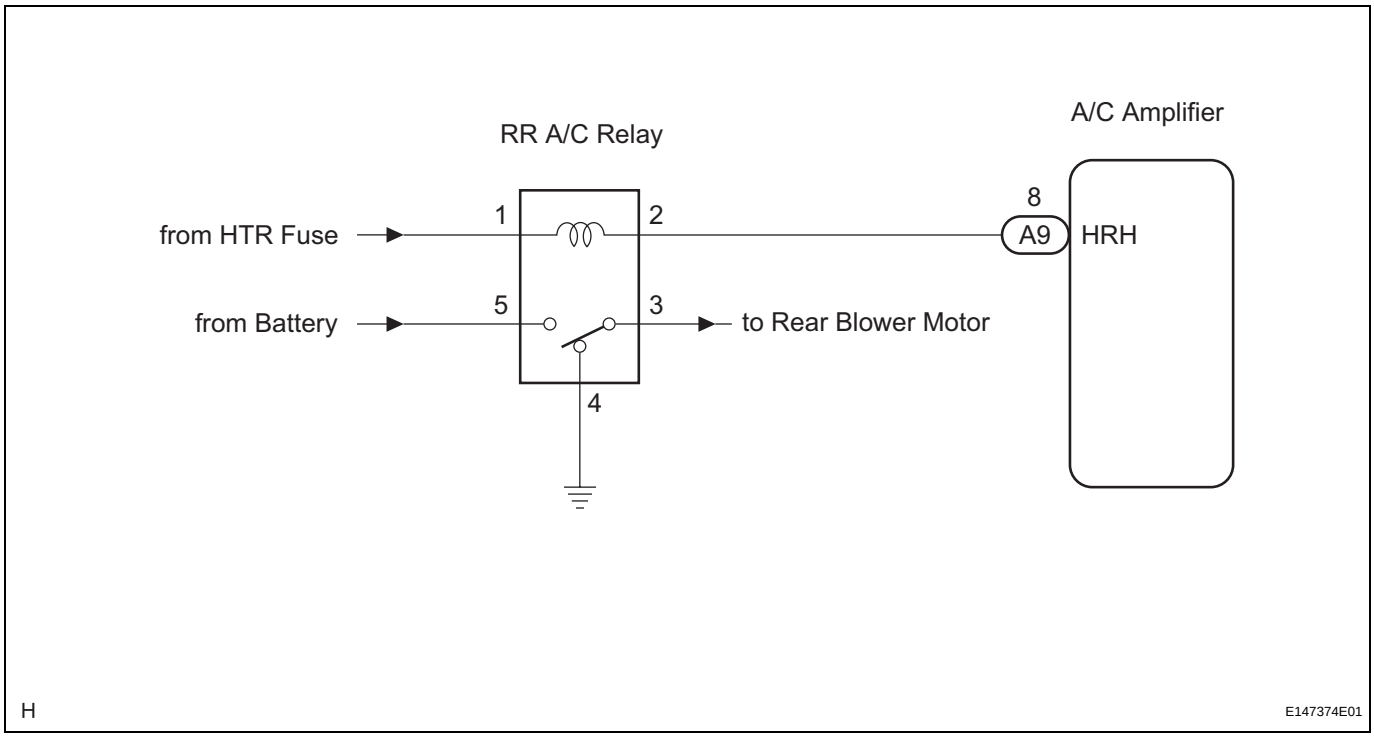

INSPECTION PROCEDURE

1	INSPECT RELAY (RR A/C)

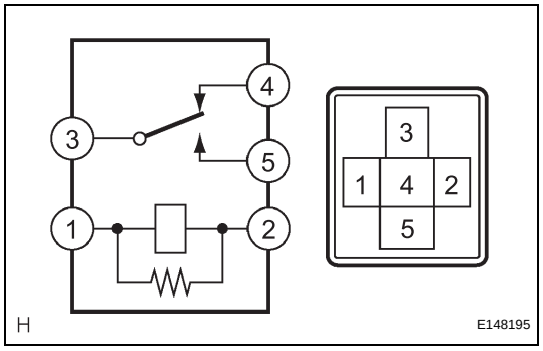

(a) Remove the RR A/C relay from the No. 3 relay block.
(b) Measure the resistance according to the value(s) in the table below.

Standard resistance

Tester Connection	Condition	Specified Condition
3 - 4	Always	Below 1 Ω
3 - 4	When battery voltage applied to terminals 1 and 2	10 kΩ or higher
3 - 5	Always	10 kΩ or higher
3 - 5	When battery voltage applied to terminals 1 and 2	Below 1 Ω

NG → **REPLACE RELAY (RR A/C)**

OK

2	CHECK HARNESS AND CONNECTOR (A/C AMPLIFIER - BATTERY)

Component with harness connected:
(A/C Amplifier)

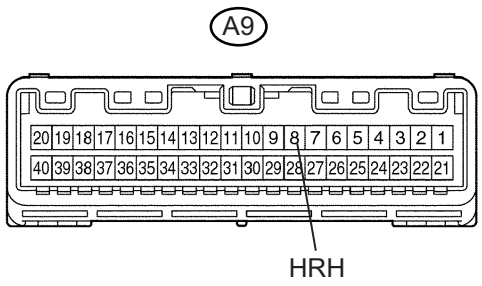

E147476E04

(a) Disconnect the connector from the A/C amplifier.
(b) Measure the voltage according to the value(s) in the table below.

Standard voltage

Tester Connection	Condition	Specified Condition
A9-8 (HRH) - Body ground	Ignition switch: ON Rear blower control dial: OFF	11 to 14 V
A9-8 (HRH) - Body ground	Ignition switch: ON Rear blower control dial: ON	Below 1 V

NG → **REPAIR OR REPLACE HARNESS OR CONNECTOR**

OK

PROCEED TO NEXT CIRCUIT INSPECTION SHOWN IN PROBLEM SYMPTOMS TABLE