IG Power Source Circuit

DESCRIPTION

The main power source is supplied to the A/C amplifier when the ignition switch is turned to the ON position.
The power source is used for operating the A/C amplifier and servo motor, etc.

WIRING DIAGRAM

AC

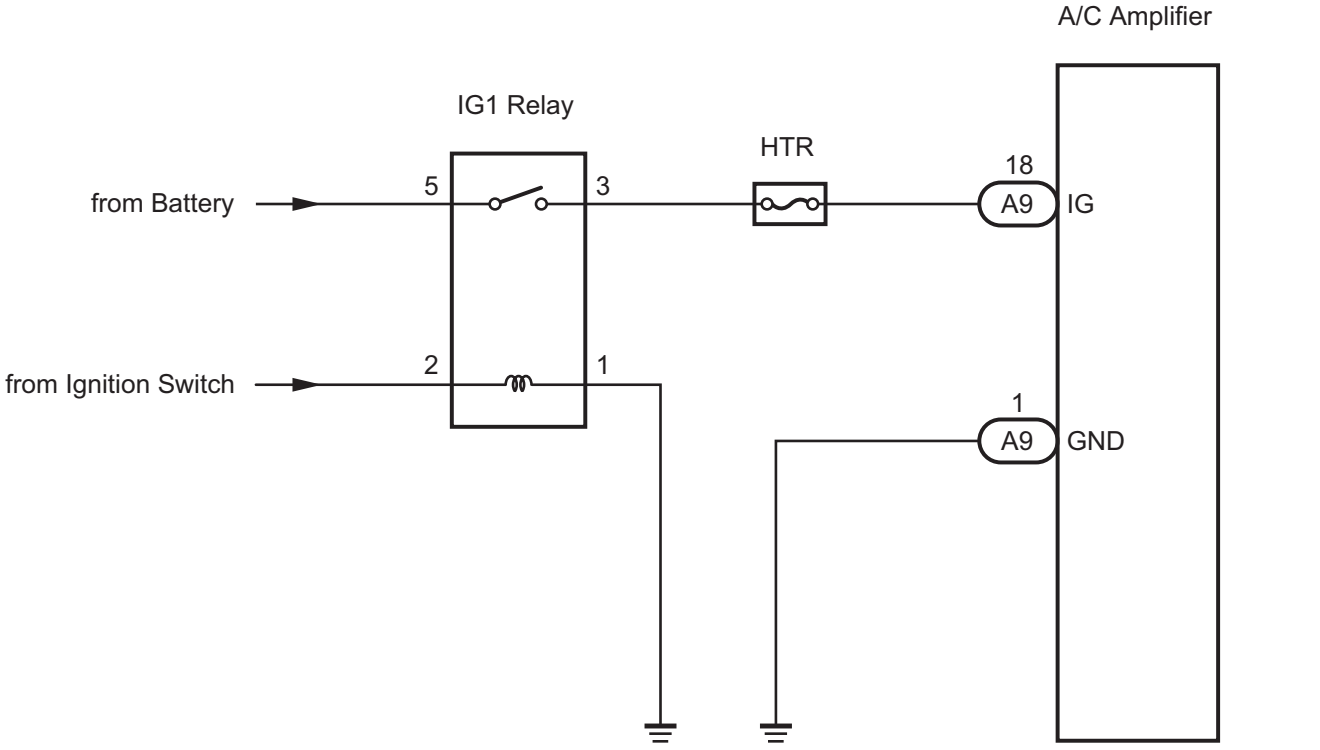

INSPECTION PROCEDURE

HINT:
Start the engine before inspection. Check the IG1 relay or battery if the engine does not start.

1	**INSPECT FUSE (HTR)**

(a) Remove the HTR fuse from the driver side junction block.
(b) Measure the resistance according to the value(s) in the table below.

Standard resistance

Tester Item	Condition	Specified Condition
HTR fuse	Always	Below 1 Ω

NG	**REPLACE FUSE (HTR)**

OK

2 INSPECT A/C AMPLIFIER (IG - GND)

Component with harness connected:
(A/C Amplifier)

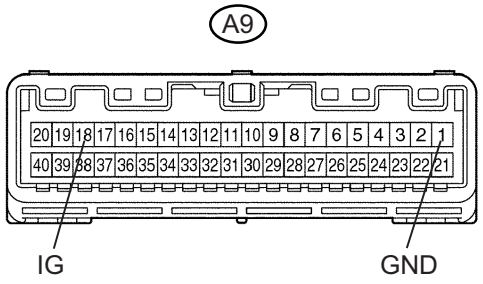

(a) Remove the A/C amplifier with its connectors still connected.
(b) Turn the ignition switch to the ON position.
(c) Measure the voltage according to the value(s) in the table below.

Standard voltage

Tester Connection	Condition	Specified Condition
A9-18 (IG) - A9-1 (GND)	Ignition switch: ON	11 to 14 V

NG → **Go to step 3**

OK

PROCEED TO NEXT CIRCUIT INSPECTION SHOWN IN PROBLEM SYMPTOMS TABLE

3 CHECK HARNESS AND CONNECTOR (A/C AMPLIFIER - BATTERY)

Front view of wire harness connector:
(to A/C Amplifier)

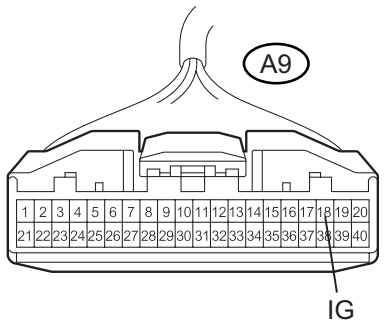

(a) Disconnect the connector from the A/C amplifier.
(b) Measure the voltage according to the value(s) in the table below.

Standard voltage

Tester Connection	Condition	Specified Condition
A9-18 (IG) - Body ground	Ignition switch: LOCK	Below 1 V
	Ignition switch: ON	11 to 14 V

NG → **REPAIR OR REPLACE HARNESS OR CONNECTOR**

OK

4	CHECK HARNESS AND CONNECTOR (A/C AMPLIFIER - BODY GROUND)

Front view of wire harness connector:
(to A/C Amplifier)

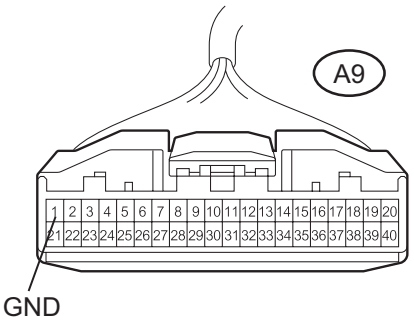

H

E143742E47

(a) Measure the resistance according to the value(s) in the table below.

Standard resistance

Tester Connection	Condition	Specified Condition
A9-1 (GND) - Body ground	Always	Below 1 Ω

NG → **REPAIR OR REPLACE HARNESS OR CONNECTOR**

OK

REPLACE A/C AMPLIFIER

AC