DTC	B1442/42	Air Inlet Damper Control Servo Motor Circuit

DESCRIPTION

The air inlet control servo motor is controlled by the A/C amplifier and moved to the desired position. The air inlet control servo motor switches the air inlet mode by rotating (normal, reverse) with electrical power from the A/C amplifier. This controls intake air and changes the mode between "RECIRCULATION", "FRESH", and "HALF-RECIRCULATION".

DTC No.	DTC Detection Condition	Trouble Area
B1442/42	Air inlet damper position sensor value does not change even if A/C amplifier operates air inlet control servo motor.	• Air inlet control servo motor • Harness or connector between air inlet control servo motor and A/C amplifier • A/C amplifier

AC

WIRING DIAGRAM

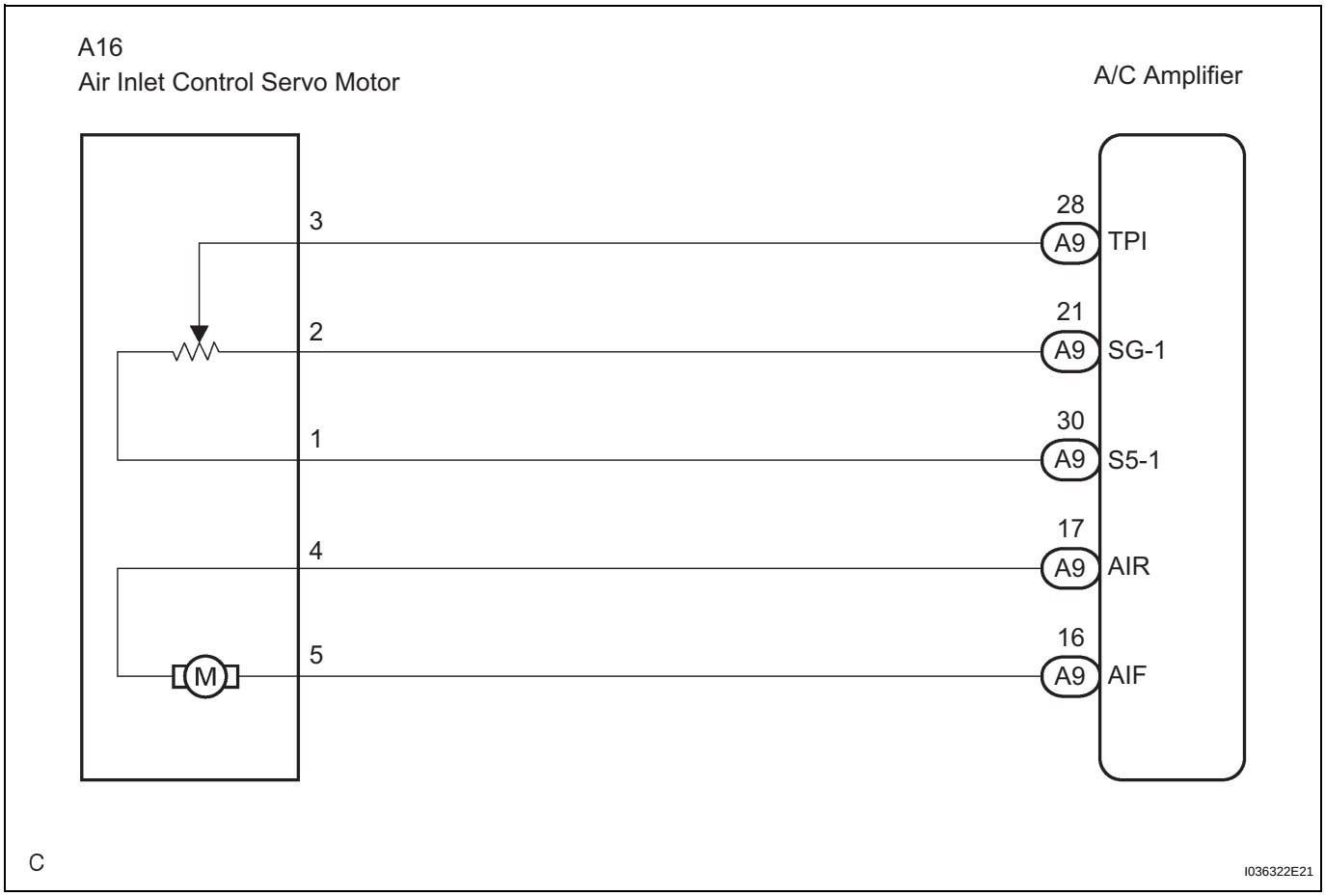

INSPECTION PROCEDURE

1	READ VALUE OF INTELLIGENT TESTER

(a) Connect the intelligent tester to the DLC3.
(b) Turn the ignition switch to the ON position and turn the intelligent tester main switch on.

(c) Select the items below in the DATA LIST, and read the display on the intelligent tester.

DATA LIST / AIR CONDITIONER

Tester Display	Measurement Item/Range	Normal Condition	Diagnostic Note
A/I DAMP POS	Air inlet damper position / min.: -14%, max.: 113.5%	Damper is at "RECIRCULATION": -10% Damper is at "HALF-RECIRCULATION": 35 to 75% Damper is at "FRESH": 110%	Open in the circuit: 50.0%
A/I DAMP TARG	Air inlet damper target position / min.: -14%, max.: 113.5%		

AC

OK:

When the target position is "RECIRCULATION" (-10%), the actual opening angle is 19.0% or less.
When the target position is "FRESH" (110%), the actual opening angle is 81.0% or more.

Result

Result	Proceed to
NG	A
OK (When troubleshooting according to the PROBLEM SYMPTOMS TABLE)	B
OK (When troubleshooting according to the DTC)	C

B → **PROCEED TO NEXT CIRCUIT INSPECTION SHOWN IN PROBLEM SYMPTOMS TABLE**

C → **REPLACE A/C AMPLIFIER**

A

2 PERFORM ACTIVE TEST BY INTELLIGENT TESTER

(a) Remove the glove box to see and check the recirculation damper operation.
(b) Connect the intelligent tester to the DLC3.
(c) Turn the ignition switch to the ON position and turn the intelligent tester main switch on.
(d) Select the item below in the ACTIVE TEST and then check that the damper operates.

ACTIVE TEST / AIR CONDITIONER

Tester Display	Test Part	Control Range	Diagnostic Note
A/I DAMP-LINEAR	Air inlet damper position (linear)	min.: -14%, max.: 113.5%	-

OK:

Lever turns from "RECIRCULATION" side to "FRESH" side smoothly.
Lever turns from "FRESH" side to "RECIRCULATION" side smoothly.

Result

Result	Proceed to
NG	A
OK (When troubleshooting according to the PROBLEM SYMPTOMS TABLE)	B
OK (When troubleshooting according to the DTC)	C

B → **PROCEED TO NEXT CIRCUIT INSPECTION SHOWN IN PROBLEM SYMPTOMS TABLE**

C → **REPLACE A/C AMPLIFIER**

A

3	**PERFORM ACTUATOR CHECK**

(a) Remove the glove box to see and check the recirculation damper operation.
(b) Enter the actuator check mode (See page AC-15).
(c) Press the DEF switch and check the operation of the recirculation damper.

Display Code	Recirculation Damper Position
0	FRESH (110%)
1	FRESH (110%)
2	FRESH (110%)
3	R/F (50%)
4	RECIRCULATION (-10%)
5	RECIRCULATION (-10%)
6	RECIRCULATION (-10%)
7	RECIRCULATION (-10%)
8	RECIRCULATION (-10%)
9	RECIRCULATION (-10%)

OK:
Recirculation damper position changes in accordance with each display code.

Result

Result	Proceed to
NG	A
OK (When troubleshooting according to the PROBLEM SYMPTOMS TABLE)	B
OK (When troubleshooting according to the DTC)	C

B → **PROCEED TO NEXT CIRCUIT INSPECTION SHOWN IN PROBLEM SYMPTOMS TABLE**

C → **REPLACE A/C AMPLIFIER**

A

4	**INSPECT AIR INLET CONTROL SERVO MOTOR**

Component without harness connected:
(Air Inlet Control Servo Motor)

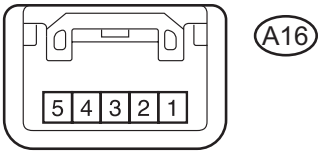

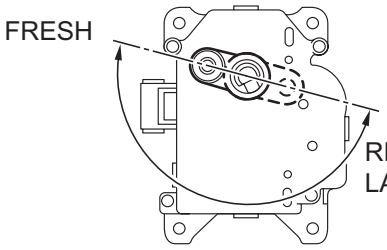

E145188E02

(a) Remove the air inlet control servo motor.
(b) Disconnect the connector from the air inlet control servo motor.
(c) Connect the positive (+) lead from the battery to terminal 5 and the negative (-) lead to terminal 4, then check that the lever turns to the "FRESH" position smoothly.
OK:
Lever turns to "FRESH" position smoothly.
(d) Connect the positive (+) lead from the battery to terminal 4 and the negative (-) lead to terminal 5, then check that the lever turns to the "RECIRCULATION" position smoothly.
OK:
Lever turns to "RECIRCULATION" position smoothly.

NG → **REPLACE AIR INLET CONTROL SERVO MOTOR**

OK

5	**CHECK HARNESS AND CONNECTOR (AIR INLET CONTROL SERVO MOTOR - A/C AMPLIFIER)**

Front view of wire harness connector:
(to Air Inlet Control Servo Motor)

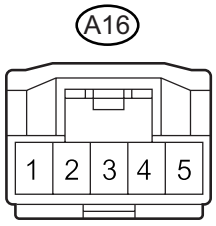

E145121E10

(a) Disconnect the connector from the A/C amplifier.

Front view of wire harness connector:
(to A/C Amplifier)

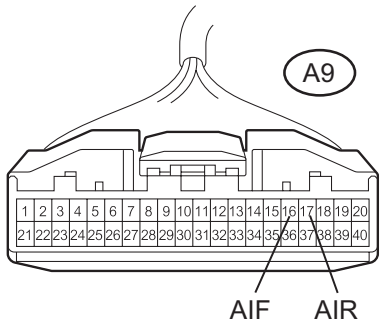

H

E143742E40

(b) Measure the resistance according to the value(s) in the table below.

Standard resistance

Tester Connection	Condition	Specified Condition
A9-17 (AIR) - A16-4	Always	Below 1 Ω
A9-16 (AIF) - A16-5	Always	Below 1 Ω
A9-17 (AIR) - Body ground	Always	10 kΩ or higher
A9-16 (AIF) - Body ground	Always	10 kΩ or higher

AC

NG → **REPAIR OR REPLACE HARNESS OR CONNECTOR**

OK

REPLACE A/C AMPLIFIER