| DTC | B1422/22 | Compressor Lock Sensor Circuit |
|---|---|---|

## SYSTEM DESCRIPTION

The ECM sends an engine speed signal to the A/C amplifier via CAN communication and BEAN communication.

The A/C amplifier reads the difference between compressor speed and engine speed. When the difference becomes too large, the A/C amplifier determines that the compressor locks, and turns the magnetic clutch off.

AC

| DTC No. | DTC Detection Condition | Trouble Area |
|---|---|---|
| B1422/22 | Open or short in compressor lock sensor circuit | • A/C compressor (A/C lock sensor)<br>• Compressor drive belt<br>• Harness or connector between compressor and magnetic clutch (A/C lock sensor)<br>• A/C amplifier<br>• CAN communication system<br>• Multiplex communication system (BEAN) |

## WIRING DIAGRAM

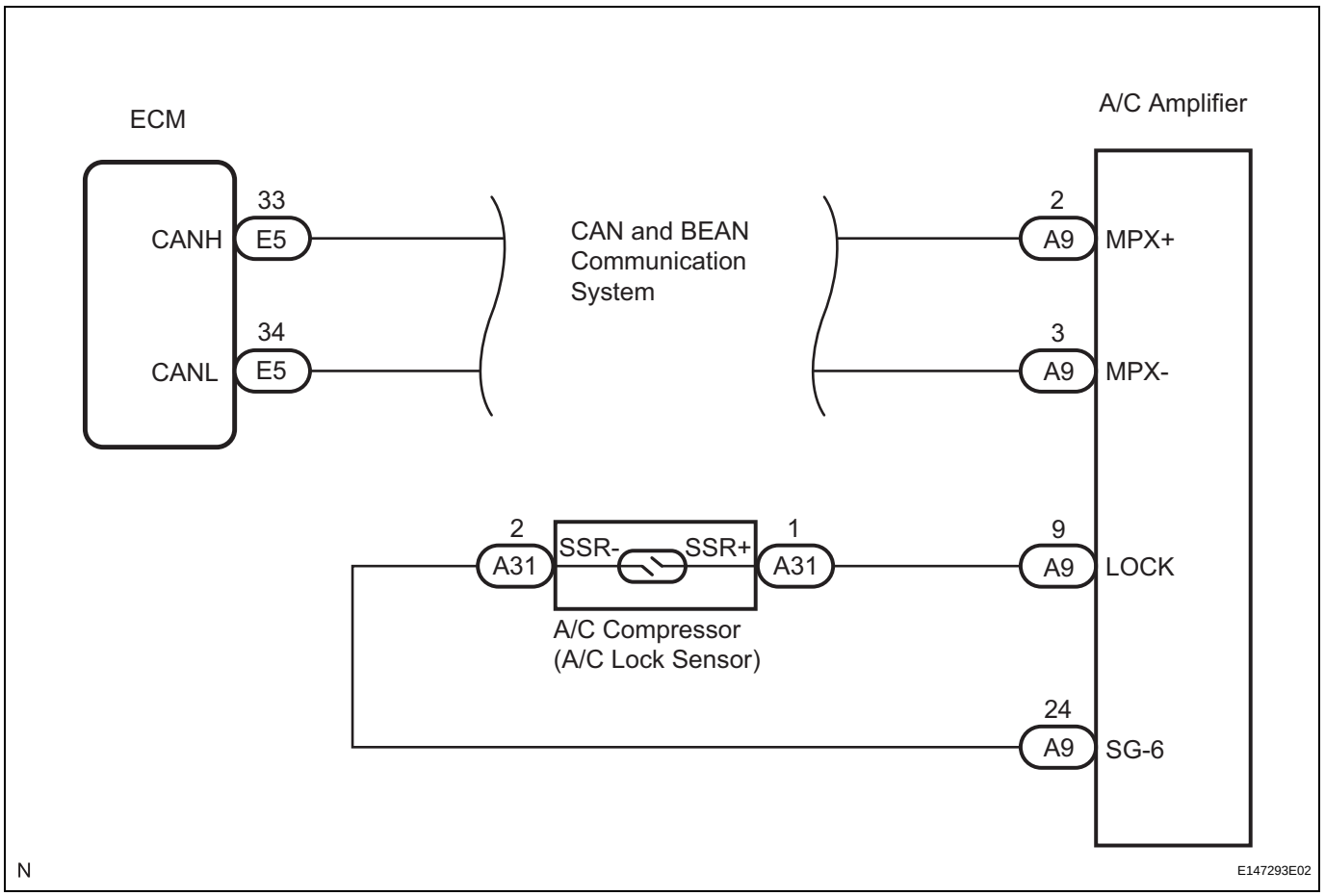


## INSPECTION PROCEDURE

| 1 | CHECK CAN COMMUNICATION SYSTEM |
|---|---|

(a) Use the intelligent tester to check if the CAN communication system is functioning normally.

**Result**

| Result | Proceed to |
|---|---|
| CAN DTC is not output | A |
| CAN DTC is output | B |

B → GO TO CAN COMMUNICATION SYSTEM

A

AC

## 2 CHECK MULTIPLEX COMMUNICATION SYSTEM

(a) Use the intelligent tester to check if the multiplex communication system (BEAN) is functioning normally.
**Result**

| Result | Proceed to |
|---|---|
| BEAN DTC is not output | A |
| BEAN DTC is output | B |

B → GO TO MULTIPLEX COMMUNICATION SYSTEM

A

## 3 INSPECT A/C AMPLIFIER

Component with harness connected:
(A/C Amplifier)

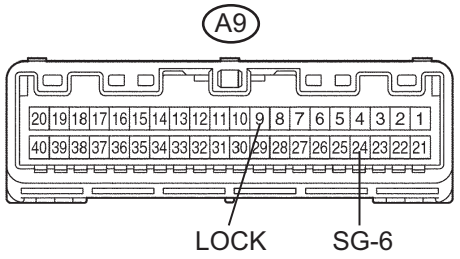


E145185E01

(a) Remove the A/C amplifier with the connectors still connected.

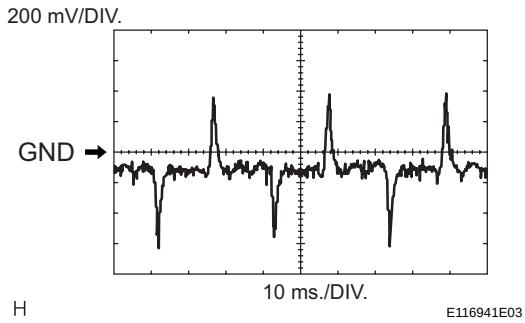


E116941E03

(b) Measure the waveform of the connector.

| Item | Contents |
|---|---|
| Tool setting | 200 mV/DIV., 10 ms./DIV. |
| Vehicle condition | Engine is running<br>A/C switch: ON<br>Blower switch: LO |

**Standard**

| Tester Connection | Condition | Specified Condition |
|---|---|---|
| A9-9 (LOCK) - A9-24 (SG-6) | Engine is running<br>A/C switch: ON<br>Blower switch: LO | Pulse generation |

**Result**

| Result | Proceed to |
|---|---|
| NG | A |
| OK (When troubleshooting according to the PROBLEM SYMPTOMS TABLE) | B |
| OK (When troubleshooting according to the DTC) | C |

B → **PROCEED TO NEXT CIRCUIT INSPECTION SHOWN IN PROBLEM SYMPTOMS TABLE**

C → **REPLACE A/C AMPLIFIER**

AC

A

## 4 INSPECT COMPRESSOR AND MAGNETIC CLUTCH (A/C LOCK SENSOR)

Component without harness connected:
(Compressor and Magnetic Clutch)

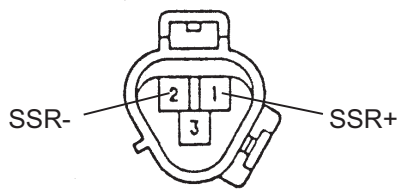


E145186E01

(a) Disconnect the connector from the A/C compressor.
(b) Measure the resistance according to the value(s) in the table below.

**Standard resistance**

| Tester Connection | Condition | Specified Condition |
|---|---|---|
| A31-1 (SSR+) - A31-2 (SSR-) | Always (at 20°C (68°F)) | 165 to 205 Ω |

NG → **REPLACE COMPRESSOR AND MAGNETIC CLUTCH (A/C LOCK SENSOR)**

OK

| 5 | CHECK HARNESS AND CONNECTOR (A/C AMPLIFIER - A/C LOCK SENSOR) |
|---|---|

Front view of wire harness connector:
(to A/C Amplifier)

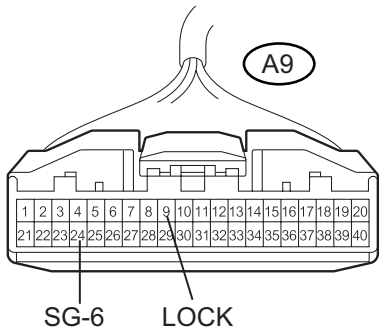


H E143742E29

Front view of wire harness connector:
(to Compressor and Magnetic Clutch)

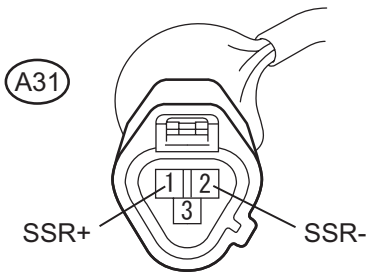


H E124442E07

(a) Disconnect the connector from the A/C amplifier.

(b) Measure the resistance according to the value(s) in the table below.

**Standard resistance**

| Tester Connection | Condition | Specified Condition |
|---|---|---|
| A9-9 (LOCK) - A31-1 (SSR+) | Always | Below 1 Ω |
| A9-24 (SG-6) - A31-2 (SSR-) | Always | Below 1 Ω |
| A9-9 (LOCK) - Body ground | Always | 10 kΩ or higher |
| A9-24 (SG-6) - Body ground | Always | 10 kΩ or higher |

NG → **REPAIR OR REPLACE HARNESS OR CONNECTOR**

OK

**REPLACE A/C AMPLIFIER**

AC