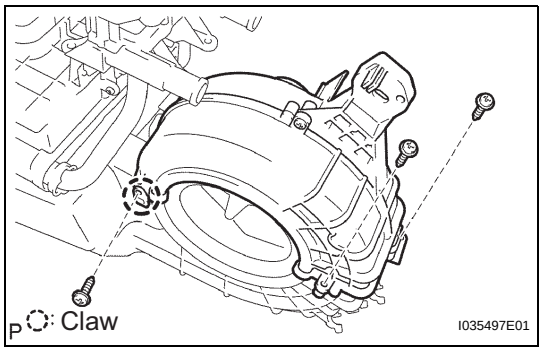

(e) Engage the claw fitting and install the 3 screws and blower case.

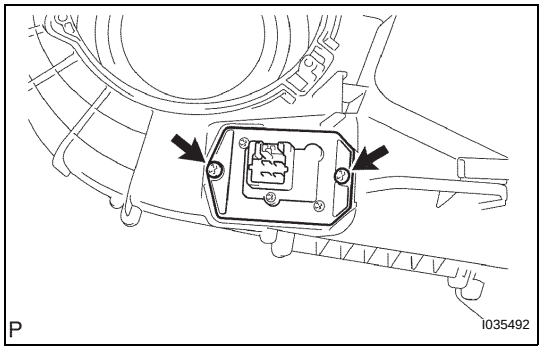

2. INSTALL BLOWER RESISTOR TRANSISTOR ASSEMBLY

(a) Install the 2 screws and the blower resistor transistor assembly.

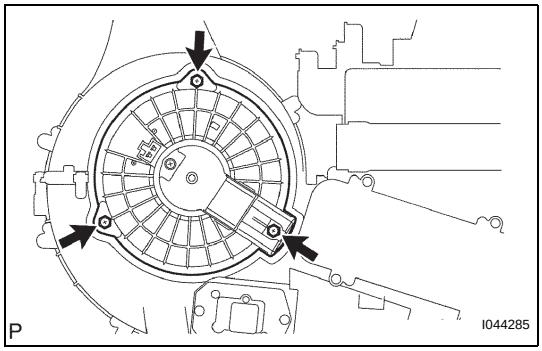

3. INSTALL COOLING UNIT MOTOR SUB-ASSEMBLY WITH FAN

(a) Install the 3 screws and the cooling unit motor sub-assembly w/ fan.

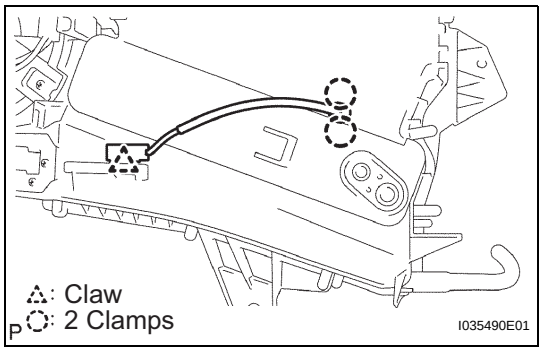

4. INSTALL COOLER THERMISTOR NO.1 (for Automatic Air Conditioning System)

(a) Engage the 2 claw fittings and the clamp and install the cooler thermistor No. 1.

INSTALLATION

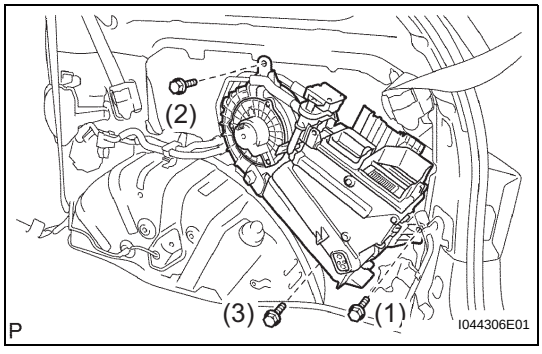

1. INSTALL AIR CONDITIONING BLOWER ASSEMBLY

(a) Install the air conditioning blower assembly with the 3 bolts.

Torque: 5.4 N*m (55 kgf*cm, 48 in.*lbf)

NOTICE:

Tighten the bolts in the order shown in the illustration to install the air conditioning blower assembly.

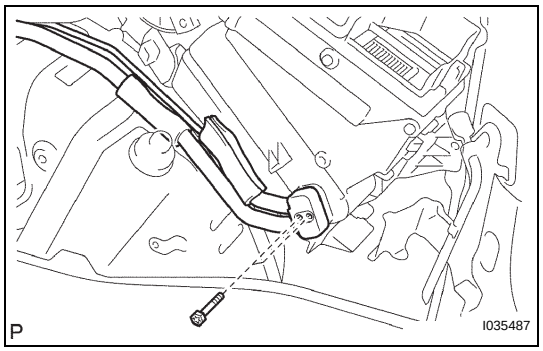

2. INSTALL AIR CONDITIONING TUBE AND ACCESSORY ASSEMBLY

(a) Sufficiently apply compressor oil to 2 new O-rings and the fitting surface of the air conditioning tube & accessory assembly.
Compressor oil:
ND-OIL 8 or equivalent

(b) Install the 2 O-rings on the air conditioning tube & accessory assembly.

(c) Install the air conditioning tube & accessory assembly with the 2 bolts.
Torque: 3.5 N*m (36 kgf*cm, 31 in.*lbf)

3. ADD ENGINE COOLANT

HINT:
See page CO-7.

4. CHARGE REFRIGERANT

SST 07110-58060 (07117-58060, 07117-58070, 07117-58080, 07117-58090, 07117-78050, 07117-88060, 07117-88070, 07117-88080)

HINT:
See page AC-172.

5. WARM UP ENGINE

6. INSPECT FOR ENGINE COOLANT LEAK

HINT:
See page CO-1.

7. INSPECT REFRIGERANT LEAK

HINT:
See page AC-168.

AC