AIR CONDITIONING UNIT

COMPONENTS

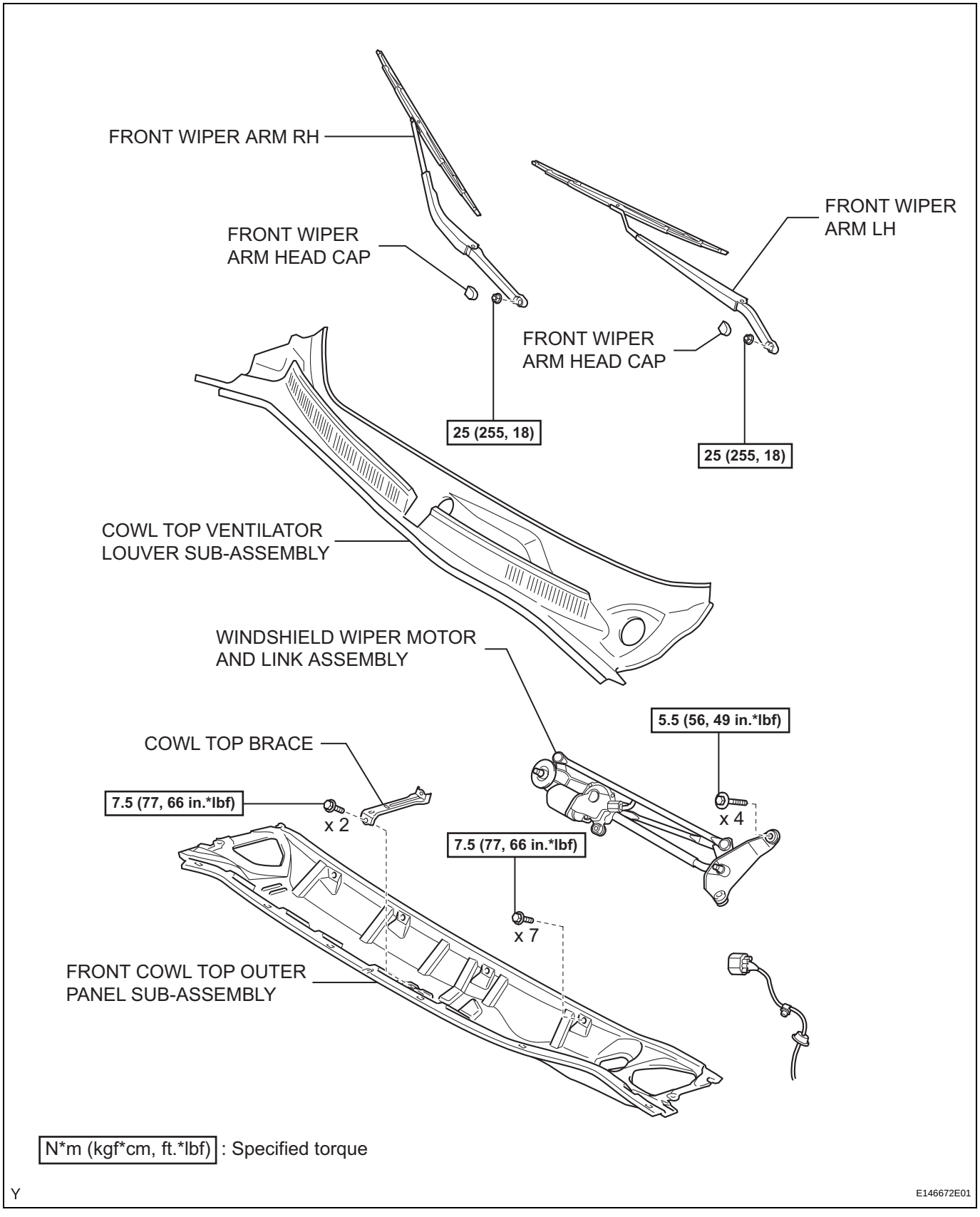

AC

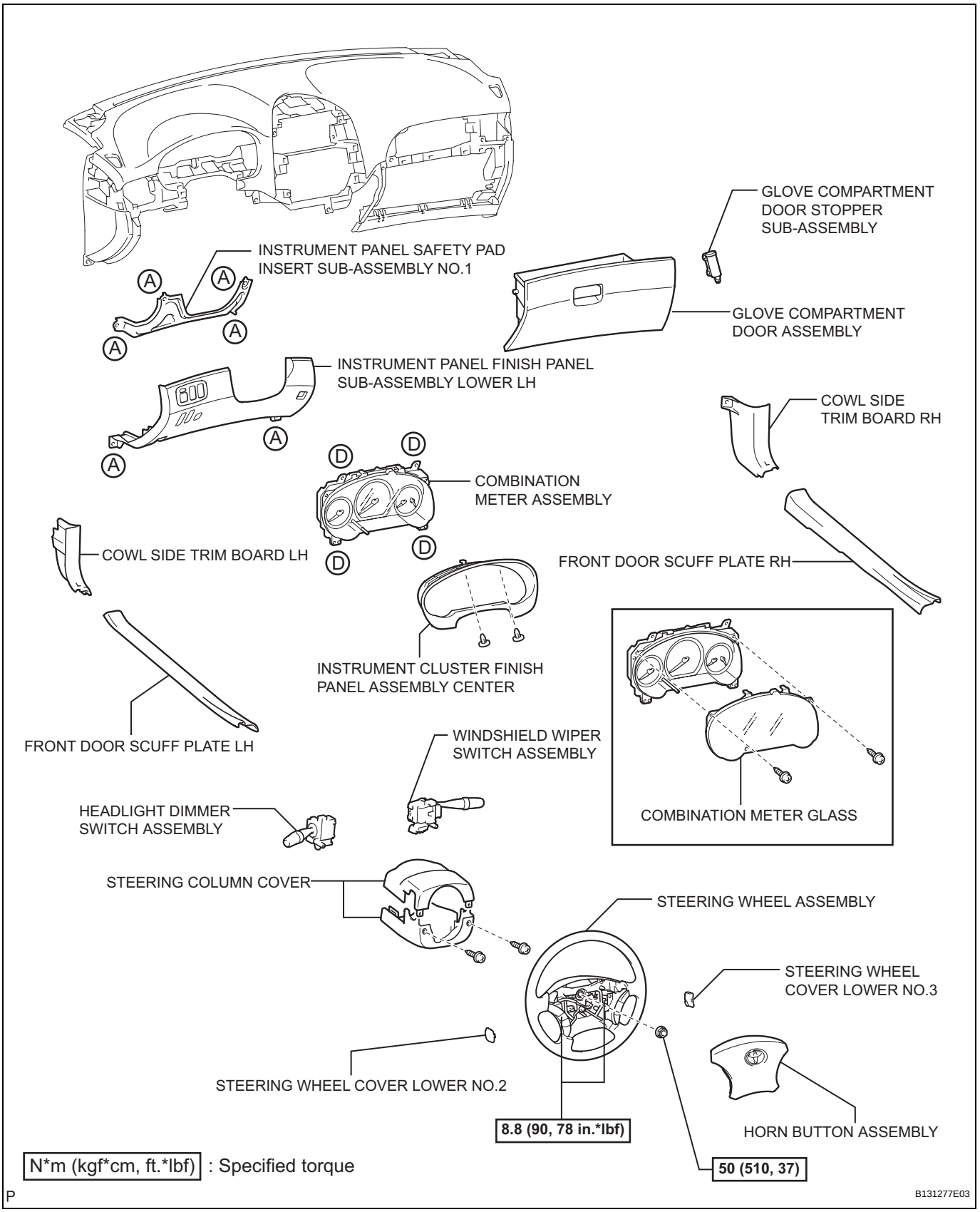
GLOVE COMPARTMENT DOOR STOPPER SUB-ASSEMBLY
INSTRUMENT PANEL SAFETY PAD INSERT SUB-ASSEMBLY NO.1
GLOVE COMPARTMENT DOOR ASSEMBLY
INSTRUMENT PANEL FINISH PANEL SUB-ASSEMBLY LOWER LH
COWL SIDE TRIM BOARD RH
COMBINATION METER ASSEMBLY
COWL SIDE TRIM BOARD LH
FRONT DOOR SCUFF PLATE RH
INSTRUMENT CLUSTER FINISH PANEL ASSEMBLY CENTER
FRONT DOOR SCUFF PLATE LH
WINDSHIELD WIPER SWITCH ASSEMBLY
COMBINATION METER GLASS
HEADLIGHT DIMMER SWITCH ASSEMBLY
STEERING COLUMN COVER
STEERING WHEEL ASSEMBLY
STEERING WHEEL COVER LOWER NO.3
STEERING WHEEL COVER LOWER NO.2
8.8 (90, 78 in.*lbf)
HORN BUTTON ASSEMBLY
50 (510, 37)
N*m (kgf*cm, ft.*lbf) : Specified torque
B131277E03

P

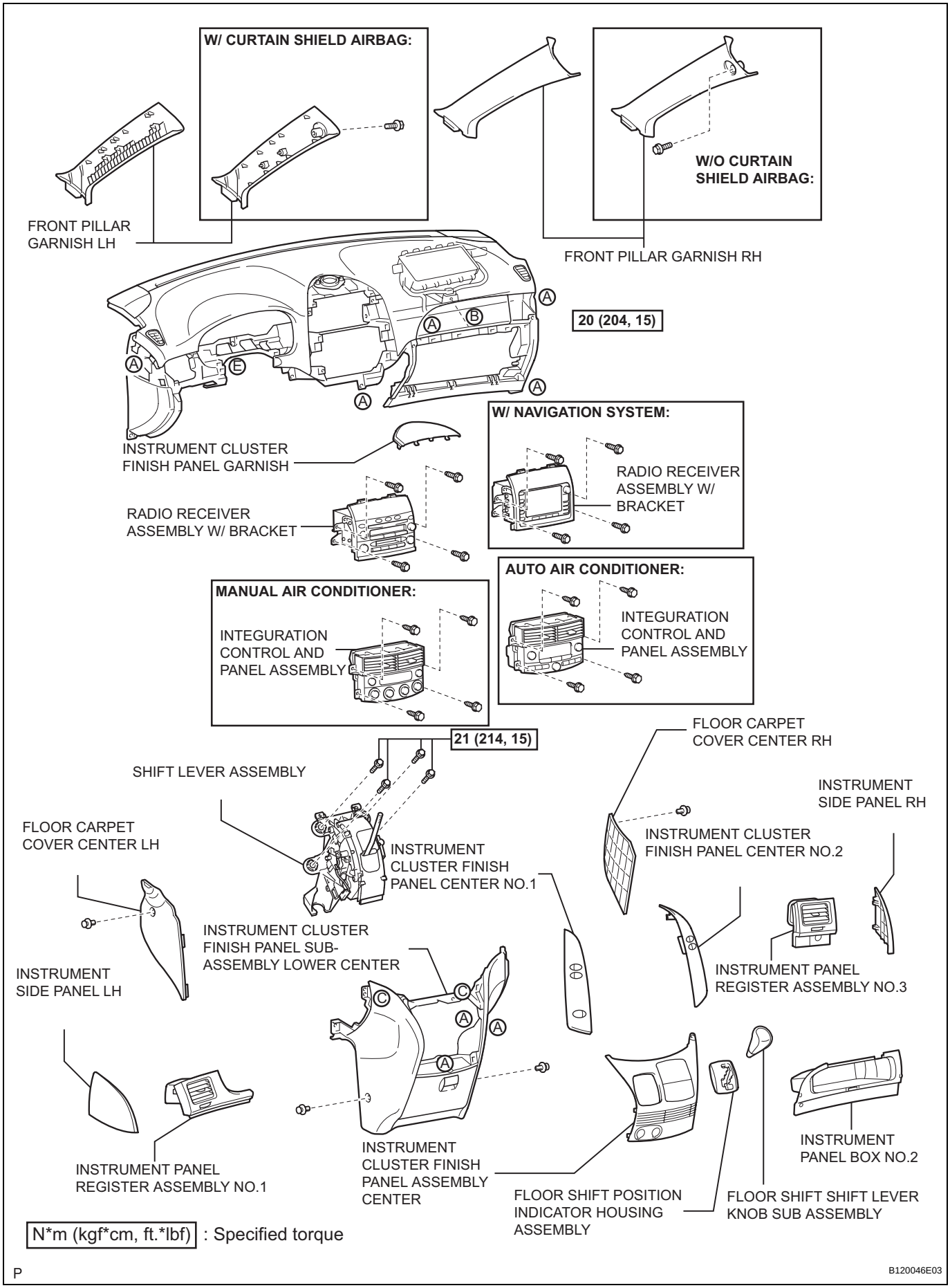
W/ CURTAIN SHIELD AIRBAG:
W/O CURTAIN SHIELD AIRBAG:
FRONT PILLAR GARNISH LH
FRONT PILLAR GARNISH RH
20 (204, 15)
W/ NAVIGATION SYSTEM:
INSTRUMENT CLUSTER FINISH PANEL GARNISH
RADIO RECEIVER ASSEMBLY W/ BRACKET
RADIO RECEIVER ASSEMBLY W/ BRACKET
AUTO AIR CONDITIONER:
MANUAL AIR CONDITIONER:
INTEGURATION CONTROL AND PANEL ASSEMBLY
INTEGURATION CONTROL AND PANEL ASSEMBLY
21 (214, 15)
SHIFT LEVER ASSEMBLY
FLOOR CARPET COVER CENTER RH
INSTRUMENT SIDE PANEL RH
FLOOR CARPET COVER CENTER LH
INSTRUMENT CLUSTER FINISH PANEL CENTER NO.2
INSTRUMENT CLUSTER FINISH PANEL CENTER NO.1
INSTRUMENT CLUSTER FINISH PANEL SUB-ASSEMBLY LOWER CENTER
INSTRUMENT SIDE PANEL LH
INSTRUMENT PANEL REGISTER ASSEMBLY NO.3
INSTRUMENT PANEL REGISTER ASSEMBLY NO.1
INSTRUMENT CLUSTER FINISH PANEL ASSEMBLY CENTER
INSTRUMENT PANEL BOX NO.2
FLOOR SHIFT POSITION INDICATOR HOUSING ASSEMBLY
FLOOR SHIFT SHIFT LEVER KNOB SUB ASSEMBLY
N*m (kgf*cm, ft.*lbf) : Specified torque
P
B120046E03

AC

AC

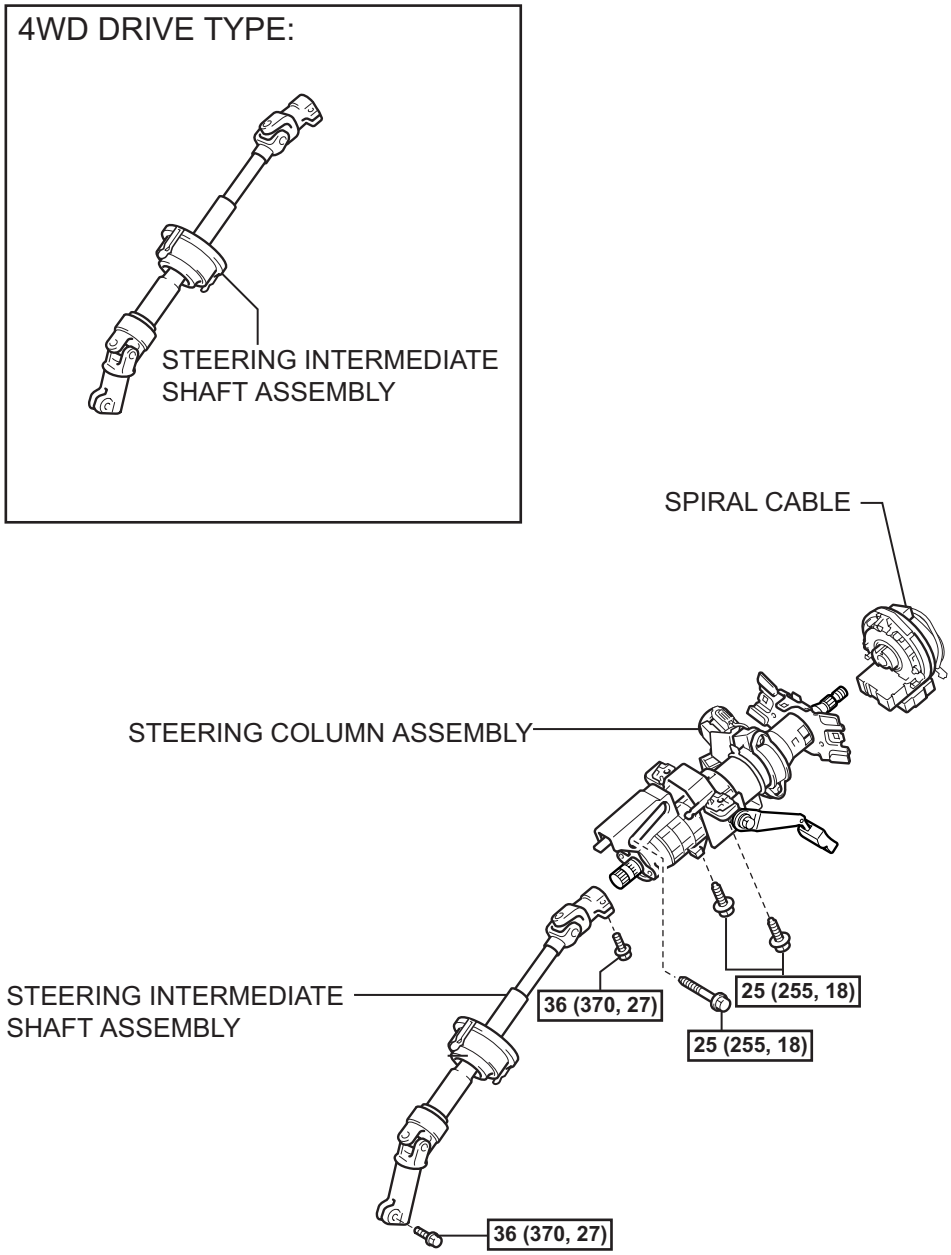

N*m (kgf*cm, ft.*lbf) : Specified torque

P

E146677E01

with Stereo Component Amplifier:

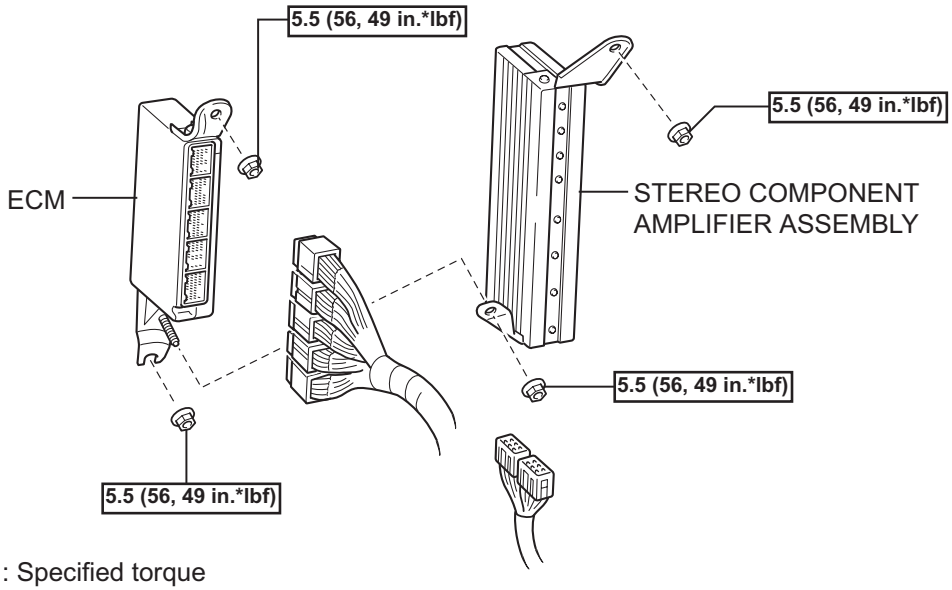

N*m (kgf*cm, ft.*lbf): Specified torque

P

E146676E01

AC

AC

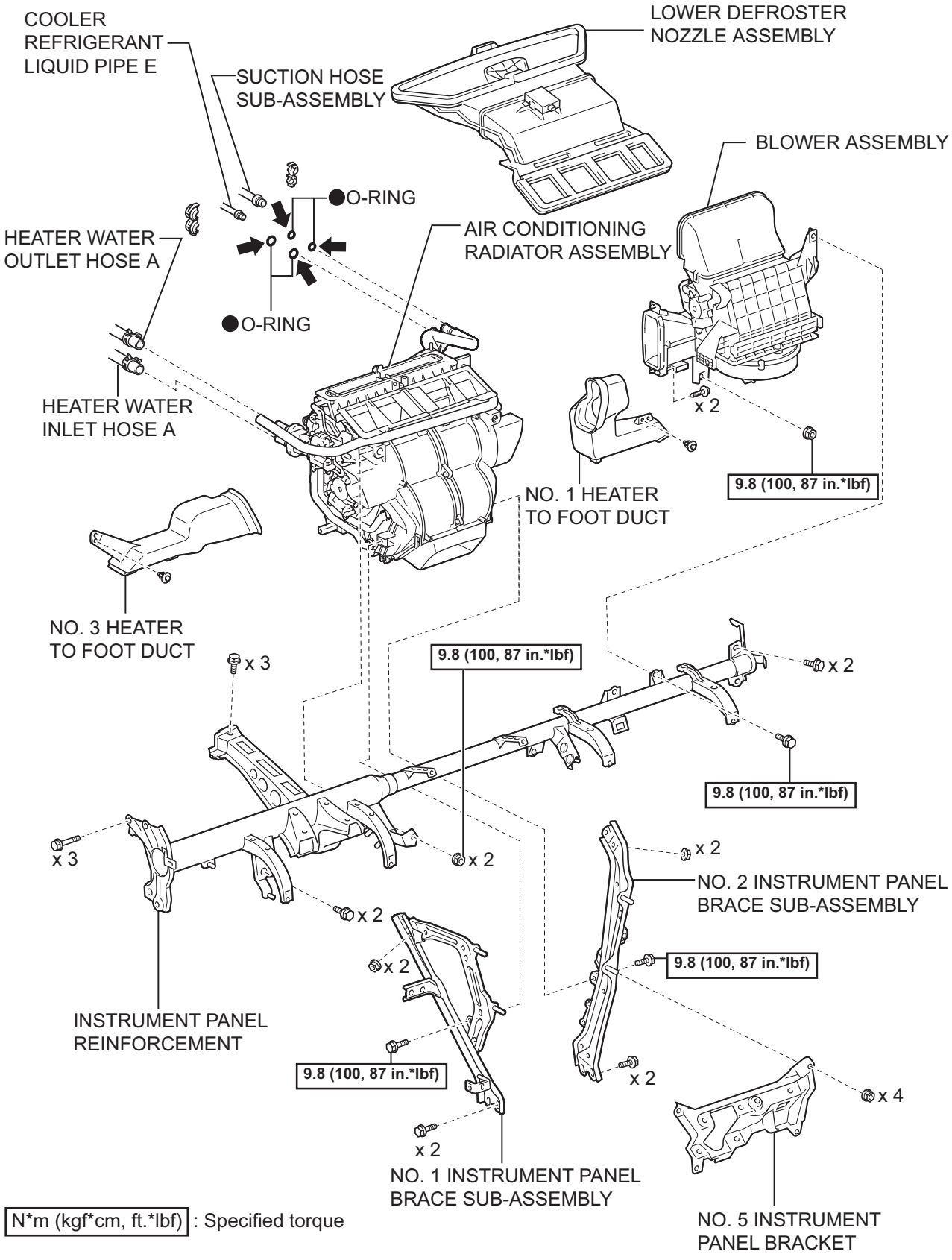

P

E146657E02

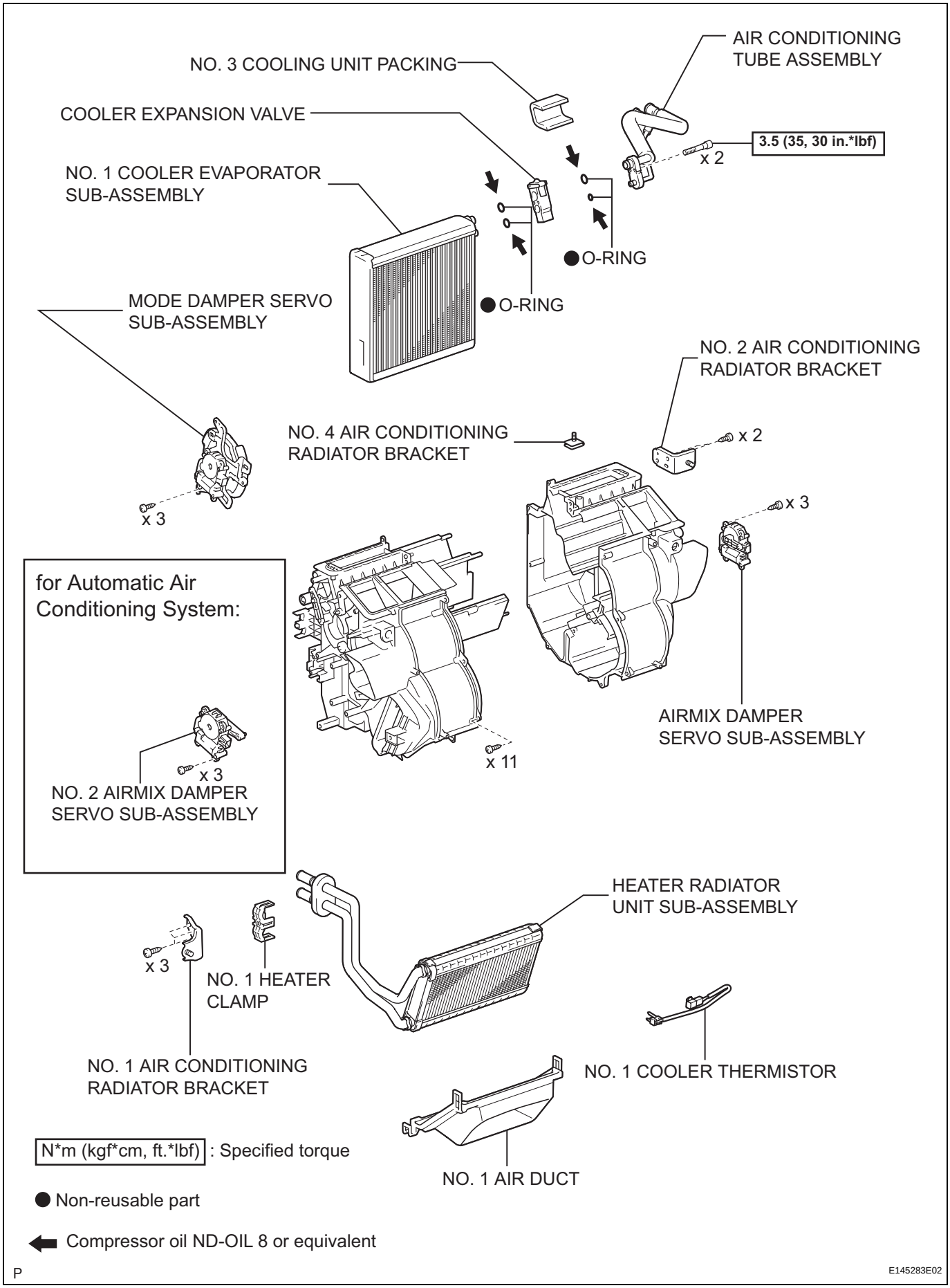
AIR CONDITIONING TUBE ASSEMBLY
NO. 3 COOLING UNIT PACKING
COOLER EXPANSION VALVE
3.5 (35, 30 in.*lbf)
x 2
NO. 1 COOLER EVAPORATOR SUB-ASSEMBLY
O-RING
O-RING
MODE DAMPER SERVO SUB-ASSEMBLY
NO. 2 AIR CONDITIONING RADIATOR BRACKET
NO. 4 AIR CONDITIONING RADIATOR BRACKET
x 2
x 3
x 3
for Automatic Air Conditioning System:
x 11
AIRMIX DAMPER SERVO SUB-ASSEMBLY
x 3
NO. 2 AIRMIX DAMPER SERVO SUB-ASSEMBLY
HEATER RADIATOR UNIT SUB-ASSEMBLY
x 3
NO. 1 HEATER CLAMP
NO. 1 AIR CONDITIONING RADIATOR BRACKET
NO. 1 COOLER THERMISTOR
NO. 1 AIR DUCT
N*m (kgf*cm, ft.*lbf) : Specified torque
Non-reusable part
Compressor oil ND-OIL 8 or equivalent
P
E145283E02