BLOWER UNIT

COMPONENTS

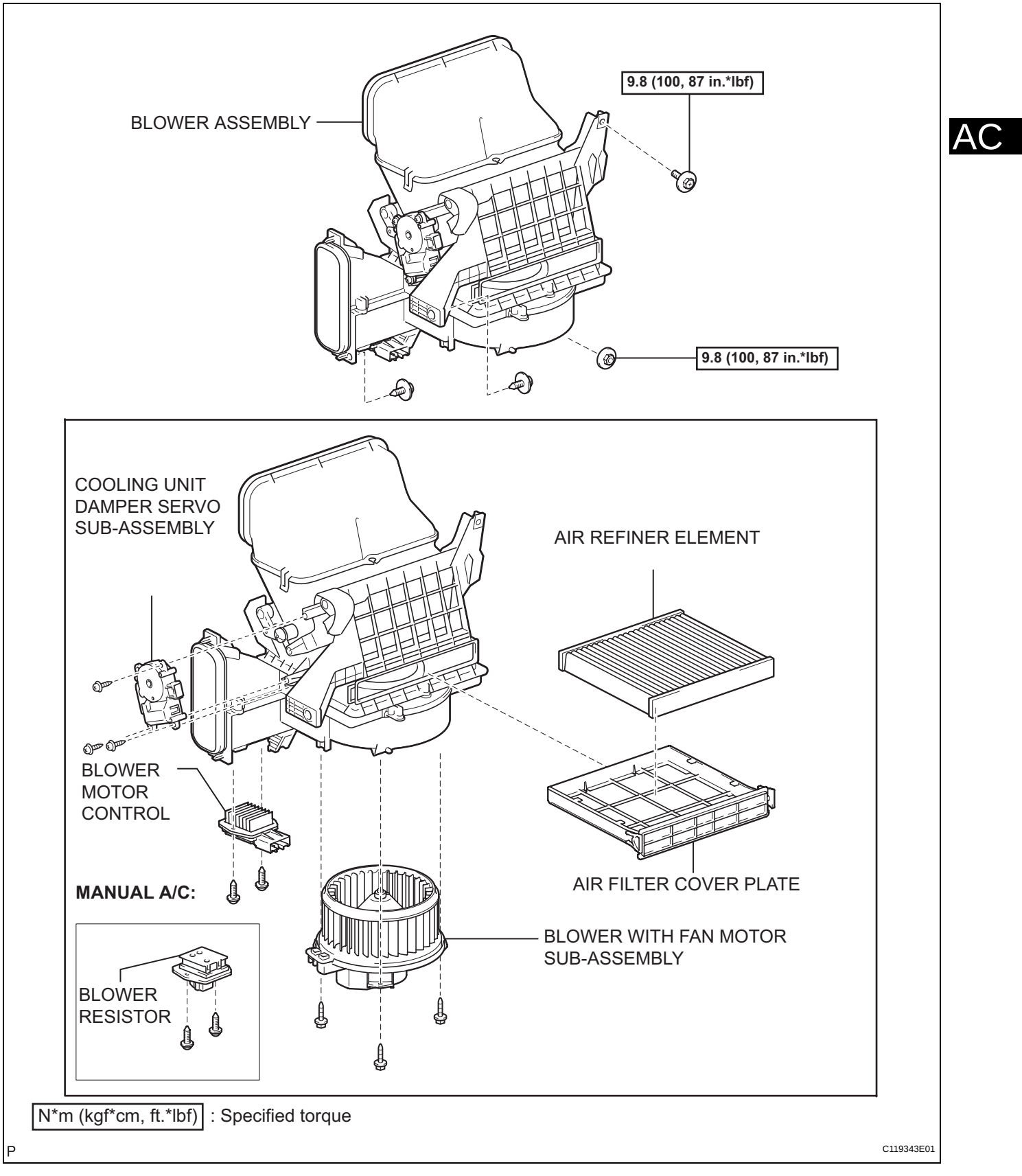

AC

REMOVAL

1. **REMOVE INSTRUMENT PANEL SUB-ASSEMBLY WITH PASSENGER AIRBAG ASSEMBLY**
   HINT:
   Refer to the instructions for removal of the instrument panel sub-assembly w/ passenger airbag assembly (See page IP-5).

2. **REMOVE HEATER TO FOOT DUCT NO.1**
   (a) Remove the clip and the heater to foot duct No. 1.

3. **REMOVE STEREO COMPONENT AMPLIFIER ASSEMBLY (w/ Stereo Compartment Amplifier) (See page AV-173)**

4. **REMOVE ECM (See page ES-498)**

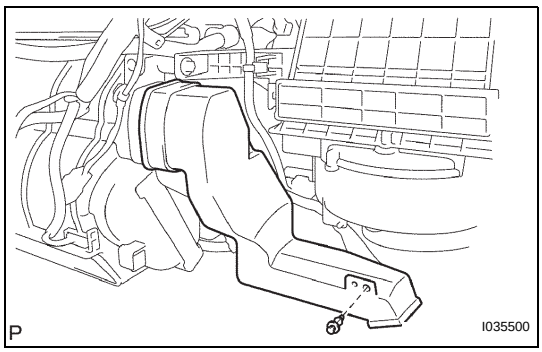

5. **REMOVE BLOWER ASSEMBLY**
   (a) Release the 2 clamps, the 2 nuts and the wire harness.

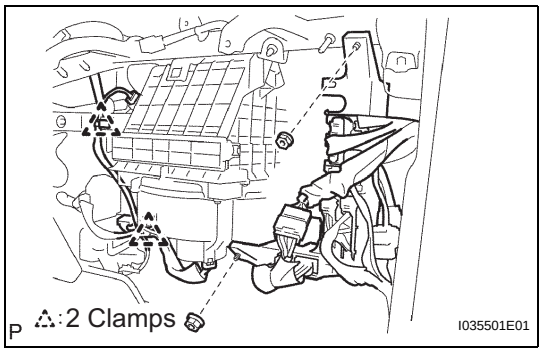

   (b) Remove the bolt, the 2 screws and the nut.
   (c) Remove the blower assembly.

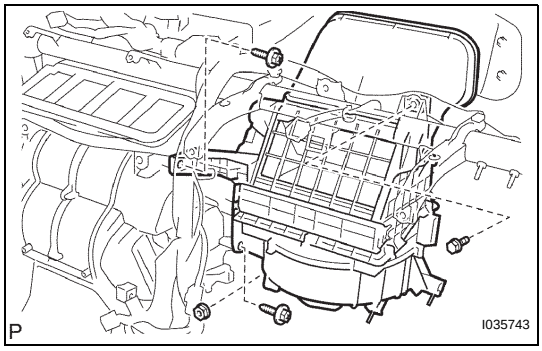

DISASSEMBLY

1. **REMOVE AIR REFINER ELEMENT**
   (a) Release the 2 claw fittings and remove the air filter sub-assembly.

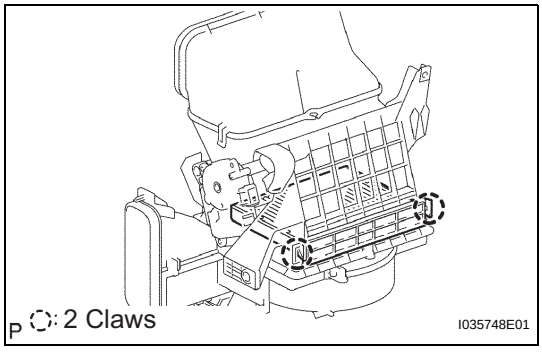

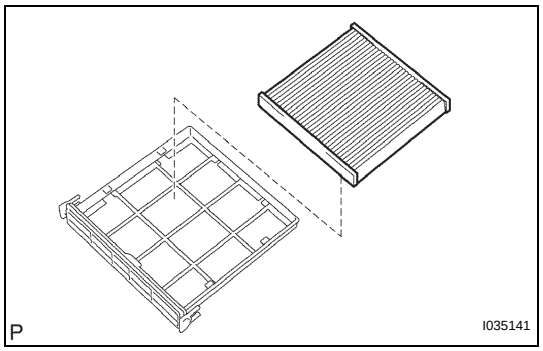

(b) Remove the air refiner element from the air filter cover plate.

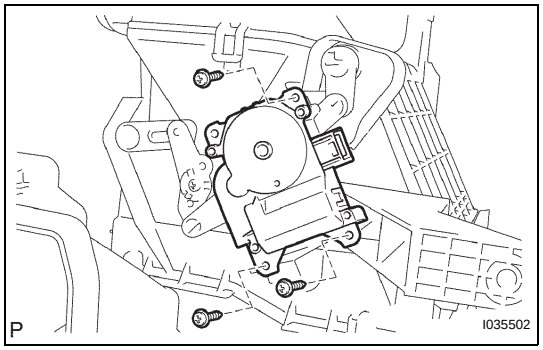

2. REMOVE COOLING UNIT DAMPER SERVO SUB-ASSEMBLY

(a) Remove the 3 screws and the cooling unit damper servo sub-assembly.

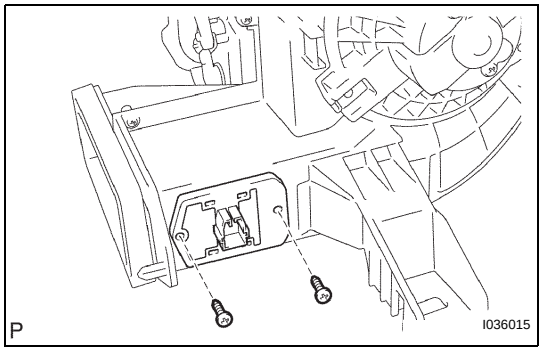

3. REMOVE BLOWER RESISTOR (for Manual Air Conditioning System)

(a) Remove the 2 screws and the blower resistor.

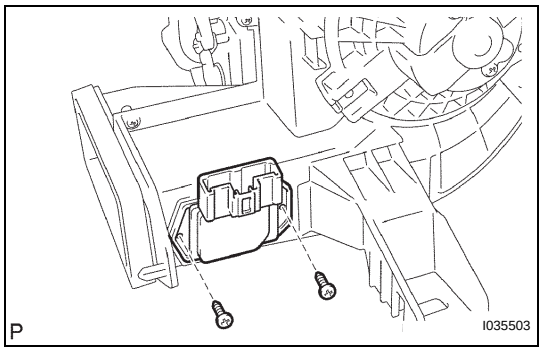

4. REMOVE BLOWER MOTOR CONTROL (for Automatic Air Conditioning System)

(a) Remove the 2 screws and the blower motor control.

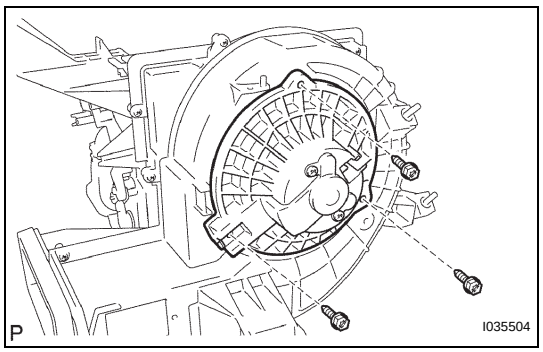

5. REMOVE BLOWER WITH FAN MOTOR SUB-ASSEMBLY

(a) Remove the 3 screws and the blower w/ fan motor sub-assembly.