BLOWER UNIT (for Rear Air Conditioning System)

COMPONENTS

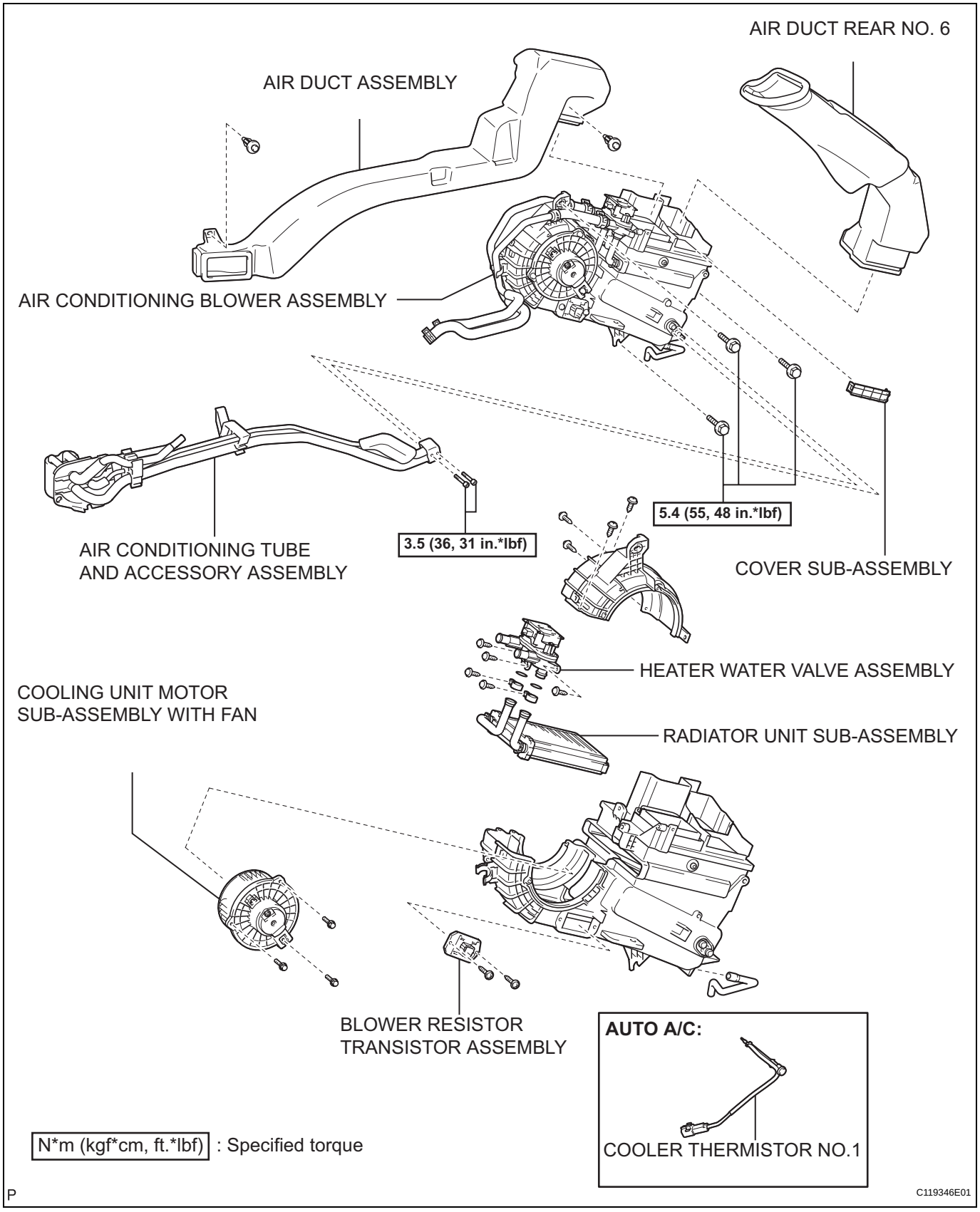

AC

REMOVAL

1. **DISCHARGE REFRIGERANT FROM REFRIGERATION SYSTEM**
   SST 07110-58060 (07117-58080, 07117-58090, 07117-78050, 07117-88060, 07117-88070, 07117-88080)
   HINT:
   See page AC-172.
2. **REMOVE REAR DOOR SCUFF PLATE RH (See page IR-7)**
3. **REMOVE BACK DOOR SCUFF PLATE (See page IR-8)**
4. **REMOVE QUARTER TRIM PANEL ASSEMBLY FRONT RH (See page IR-9)**
5. **REMOVE ROOF HEADLINING GARNISH REAR (See page IR-9)**
6. **REMOVE RR WINDOW SIDE GARNISH ASSEMBLY NO.2 RH (See page IR-9)**
7. **REMOVE AIR DUCT ASSEMBLY**
   (a) Remove the 2 clips and the air duct assembly from the air conditioning blower assembly.

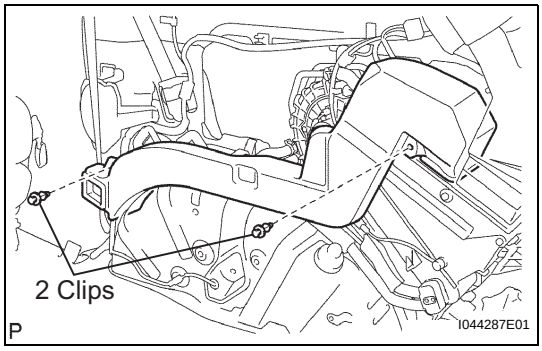

8. **REMOVE COVER SUB-ASSEMBLY**
   (a) Disengage the 2 claw fittings and remove the cover sub-assembly.

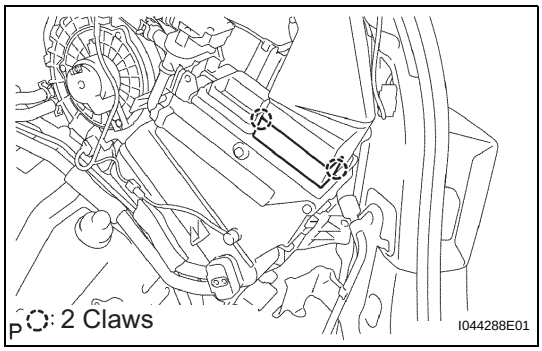

9. **REMOVE AIR DUCT ASSEMBLY**
   (a) Remove the air duct assembly.

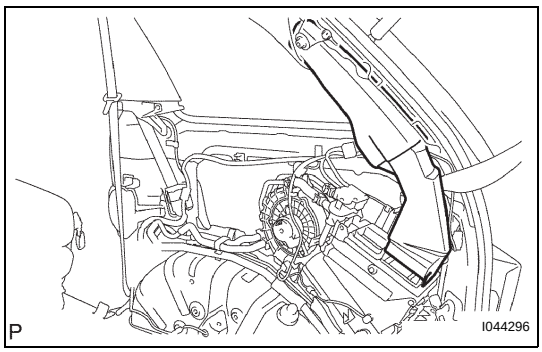

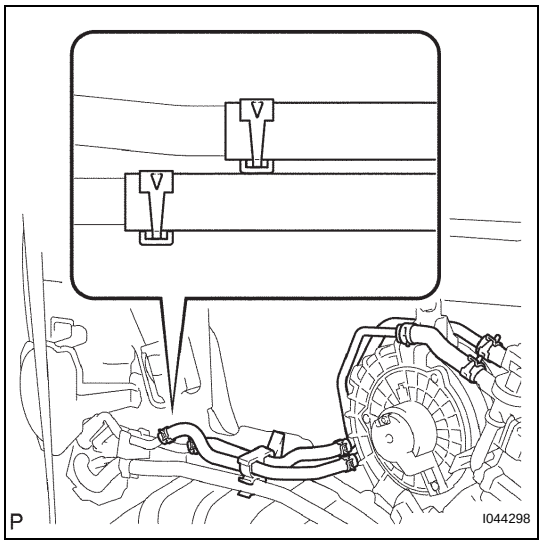

10. DISCONNECT HEATER HOSE

(a) Release the claw fittings and release the heater hose clamp.

(b) Using pliers, grip the claws of the 2 clips and slide the clip to disconnect the 2 heater hoses.

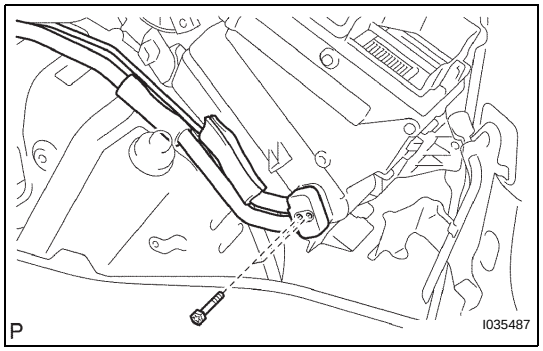

11. DISCONNECT AIR CONDITIONING TUBE AND ACCESSORY ASSEMBLY

(a) Remove the 2 bolts and disconnect the air conditioning tube & accessory assembly.

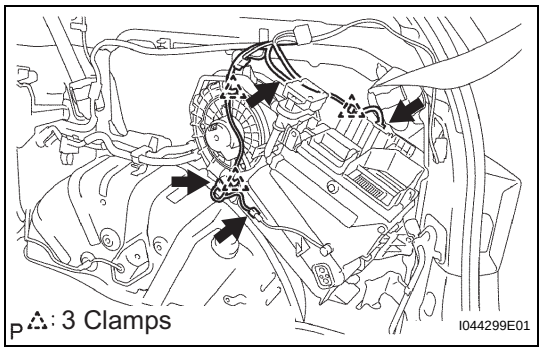

12. REMOVE AIR CONDITIONING BLOWER ASSEMBLY

(a) Disconnect the 4 connectors, release the 3 clamps and separate the wire harness.

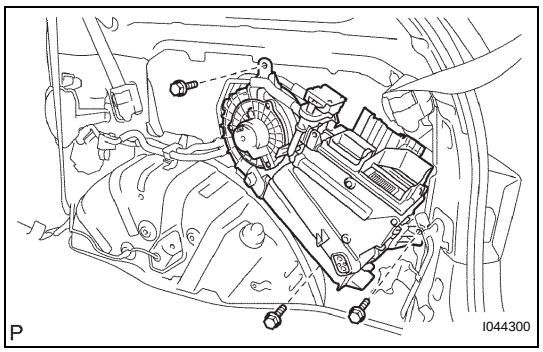

(b) Remove the 3 bolts and the air conditioning blower assembly.

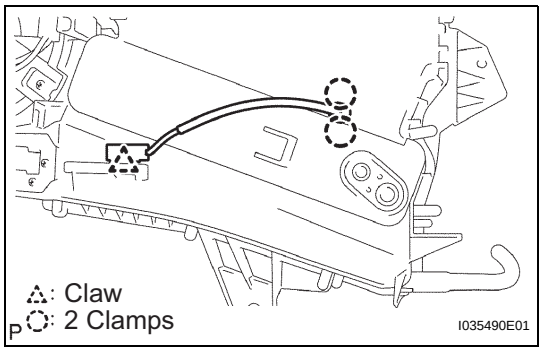

DISASSEMBLY

1. REMOVE COOLER THERMISTOR NO.1 (for Automatic Air Conditioning System)

(a) Disengage the 2 claw fittings and the clamp and remove the cooler thermistor No. 1.

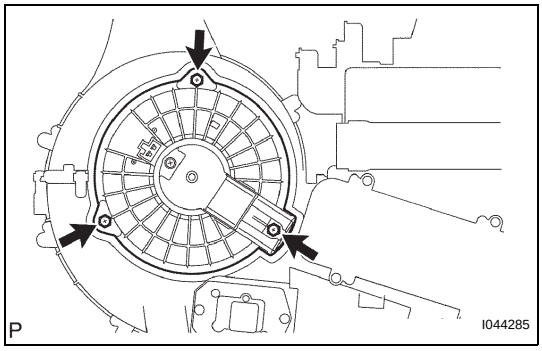

2. REMOVE COOLING UNIT MOTOR SUB-ASSEMBLY WITH FAN

(a) Remove the 3 screws and the cooling unit motor sub-assembly w/ fan.

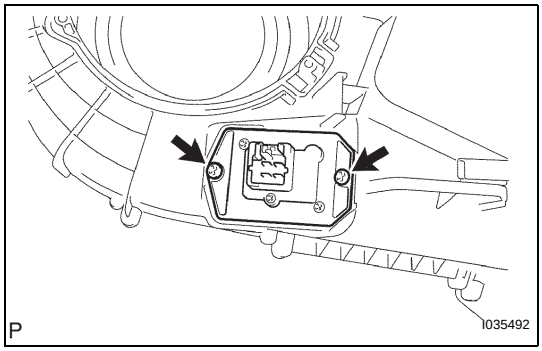

3. REMOVE BLOWER RESISTOR TRANSISTOR ASSEMBLY

(a) Remove the 2 screws and the blower resistor transistor assembly.

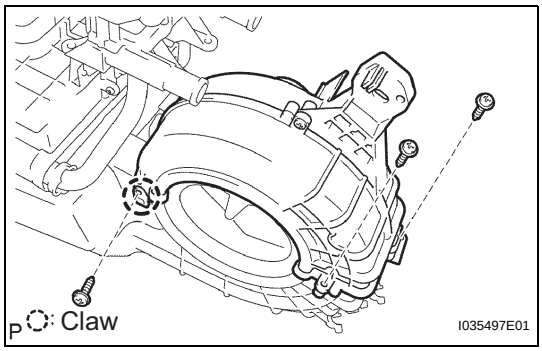

4. REMOVE HEATER RADIATOR UNIT SUB-ASSEMBLY

(a) Disengage the claw fitting and remove the 3 screws and blower case.

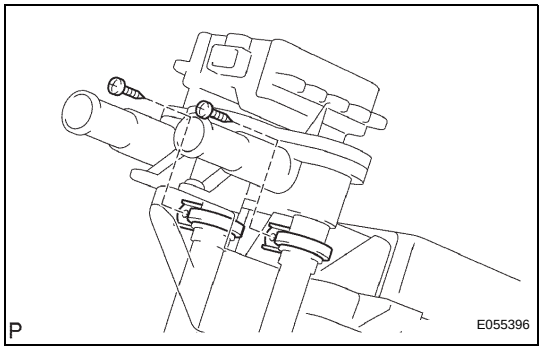

(b) Remove the 2 screws and the 2 clamps.

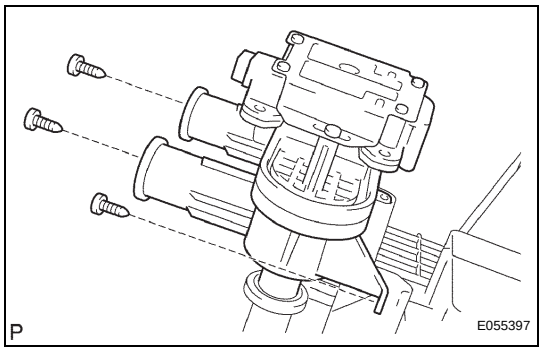

(c) Remove the 3 screws and the heater water valve assembly.
(d) Remove the 2 O-rings from the heater water valve assembly.

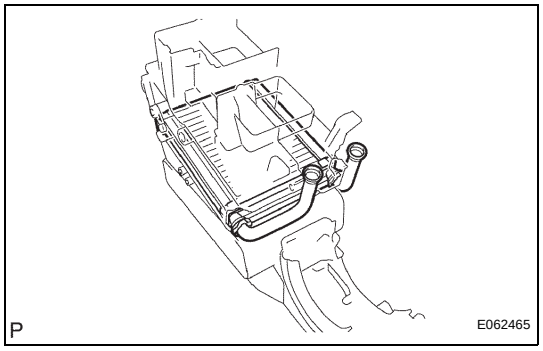

(e) Remove the heater radiator unit sub-assembly from the air conditioning blower assembly.

REASSEMBLY

1. INSTALL HEATER RADIATOR UNIT SUB-ASSEMBLY

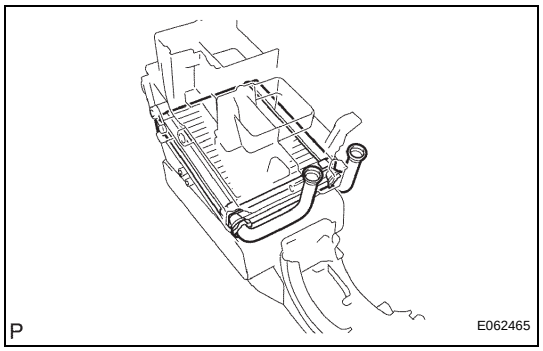

(a) Install the heater radiator unit sub-assembly to the air conditioning blower assembly.
(b) Install the 2 O-rings to the heater water valve assembly.

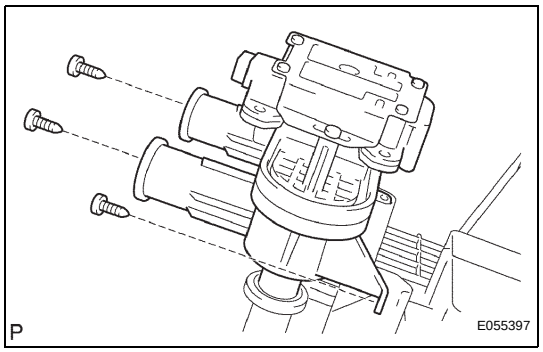

(c) Install the 3 screws and the heater water valve assembly.

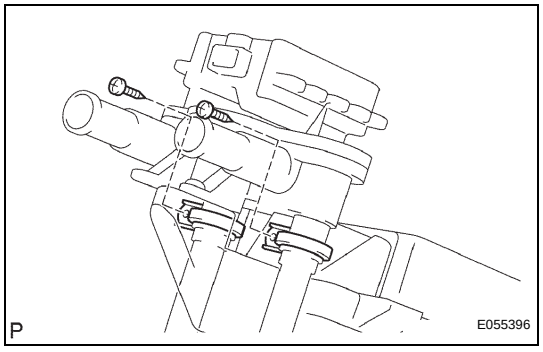

(d) Install the 2 screws and the 2 clamps.