Component without harness connected:
(Rear Air Mix Control Servo Motor)

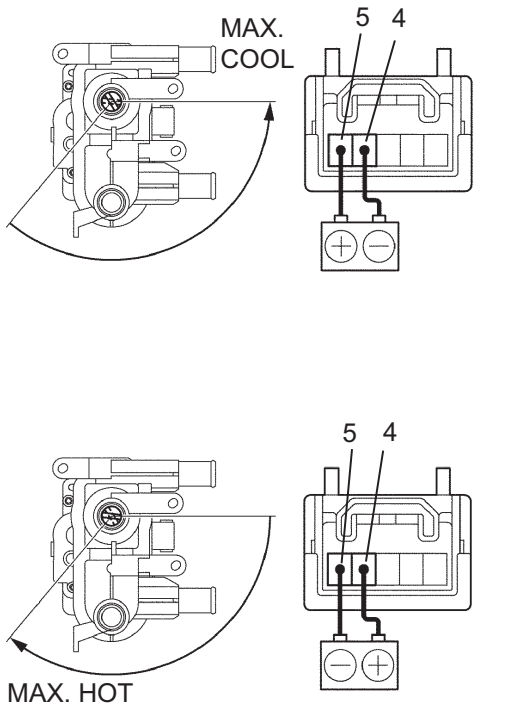

E145192E03

AIR MIX CONTROL SERVO MOTOR (for Rear Air Conditioning System)

ON-VEHICLE INSPECTION

1. INSPECT REAR AIR MIX CONTROL SERVO MOTOR

(a) Inspect servo motor operation.

(1) Connect the positive (+) lead from the battery to terminal 4 and negative (-) lead to terminal 5, then check that the arm turns to "HOT" side smoothly.

(2) Connect the positive (+) lead from the battery to terminal 5 and negative (-) lead to terminal 4, then check that the arm turns to "COOL" side smoothly.

If the operations are not as specified, replace the rear radiator unit sub-assembly (rear air mix control servo motor).

AC