HEATER RELAY

ON-VEHICLE INSPECTION

1. INSPECT HEATER RELAY

(a) Remove the heater relay.

(b) Measure the resistance according to the value(s) in the table below.

Standard resistance

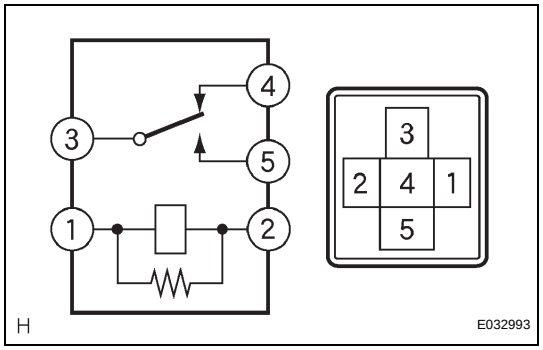

Tester Connection	Condition	Specified Condition
3 - 5	Always	10 kΩ or higher
	When battery voltage is applied to terminals 1 and 2	Below 1 Ω
3 - 4	Always	Below 1 Ω
	When battery voltage is applied to terminals 1 and 2	10 kΩ or higher

If the resistance is not as specified, replace the heater relay.

AC