REMOVAL

1. **REMOVE INSTRUMENT CLUSTER FINISH PANEL CENTER NO.1 (See page IP-8)**
2. **REMOVE INSTRUMENT CLUSTER FINISH PANEL CENTER NO.2**
3. **REMOVE SHIFT LEVER KNOB SUB-ASSEMBLY**
   HINT:
   (See page AX-146 for U151E, AX-146 for U151F)
4. **REMOVE INSTRUMENT CLUSTER FINISH PANEL ASSEMBLY CENTER (See page IP-9)**
5. **REMOVE INSTRUMENT CLUSTER FINISH PANEL GARNISH (See page IP-9)**
6. **REMOVE RADIO RECEIVER ASSEMBLY WITH BRACKET (w/o Navigation System) (See page AV-169)**
7. **REMOVE RADIO RECEIVER ASSEMBLY WITH BRACKET (w/ Navigation System)**
8. **REMOVE INTEGRATION CONTROL AND PANEL ASSEMBLY**
   (a) Remove the 4 screws, and release the integration control & panel assembly.
   (b) Disconnect the connectors and remove the integration control & panel assembly.

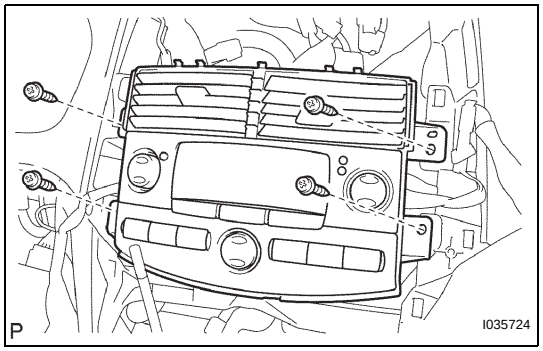

DISASSEMBLY

1. **REMOVE CENTER CLUSTER MODULE KNOB NO.1 (for Manual Air Conditioning System)**
   (a) Remove the center cluster module knob No. 1.

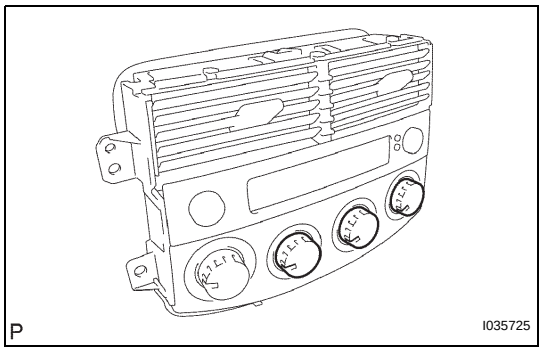

2. **REMOVE CENTER CLUSTER MODULE KNOB NO.2 (for Manual Air Conditioning System)**
   (a) Release the 2 claws fittings and remove the center cluster module knob No. 2.
   NOTICE:
   Take care not to break the claws on the knob.

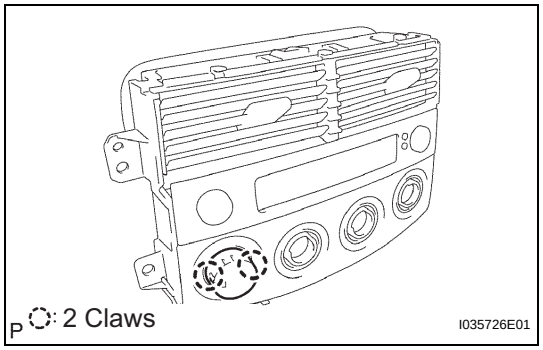

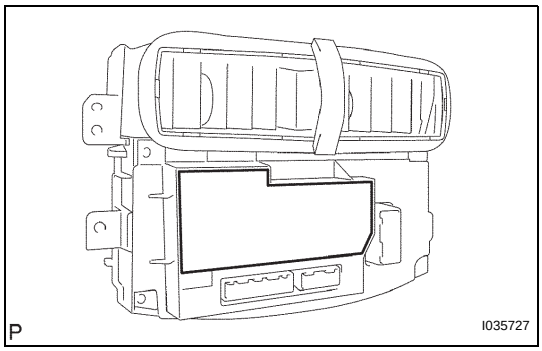

3. REMOVE AIR CONDITIONER AMPLIFIER ASSEMBLY (for Manual Air Conditioning System)

(a) Remove the plate.

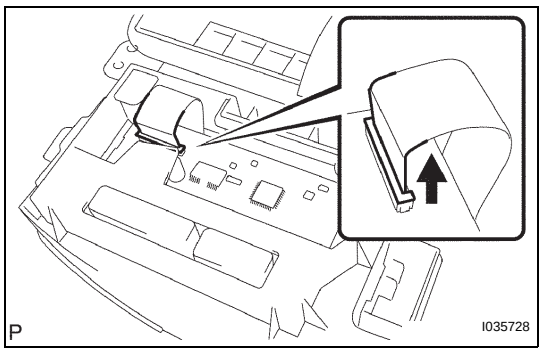

(b) Release the lock of the connector and disconnect the cable.

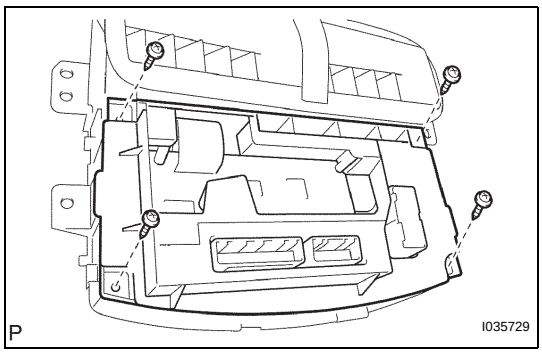

(c) Remove the 4 screws, and the heater control housing.

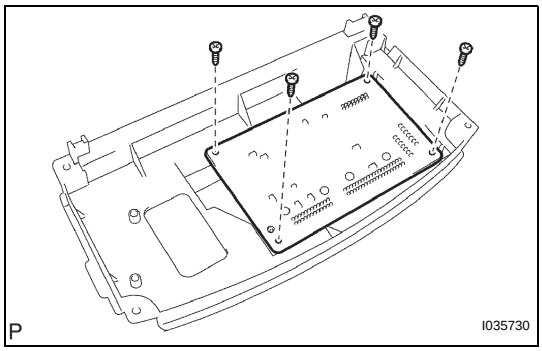

(d) Remove the 4 screws, and the air conditioner amplifier assembly.

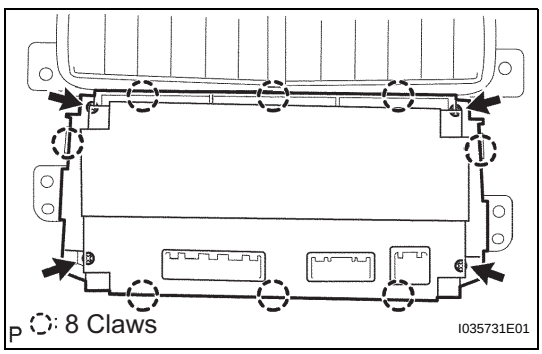

4. REMOVE AIR CONDITIONER AMPLIFIER ASSEMBLY (for Automatic Air Conditioning System)

(a) Release the 8 claw fittings and remove the 4 screws and the heater control housing.

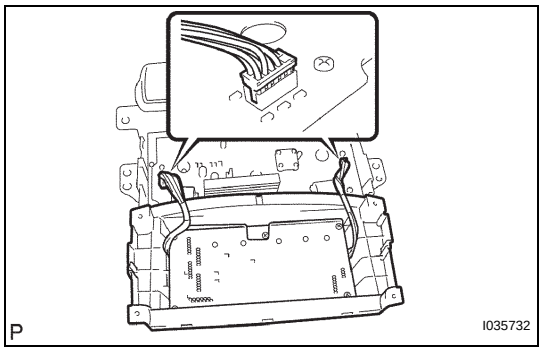

(b) Disconnect the 2 connectors.

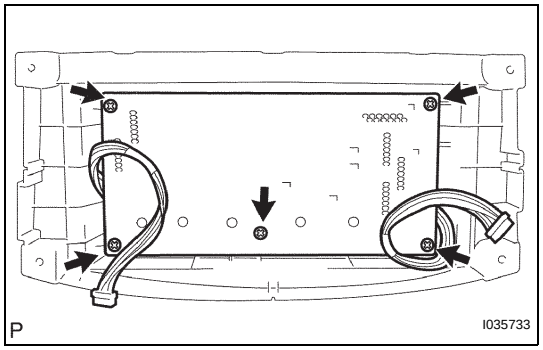

(c) Remove the 5 screws and the air conditioner amplifier assembly.

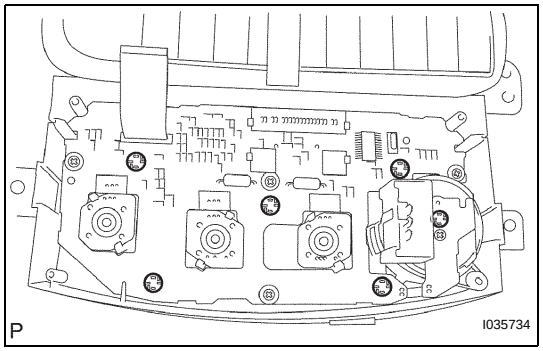

5. REMOVE INTEGRATION CONTROL AND PANEL BULB (for Manual Air Conditioning System)

(a) Remove the integration control & panel bulb.

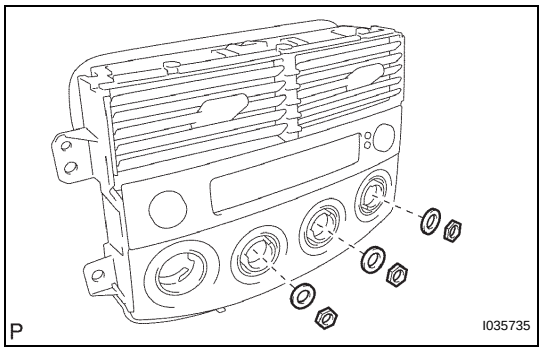

6. REMOVE HEATER BLOWER SWITCH (for Manual Air Conditioning System)

(a) Remove the 3 nuts, and the 3 washers.

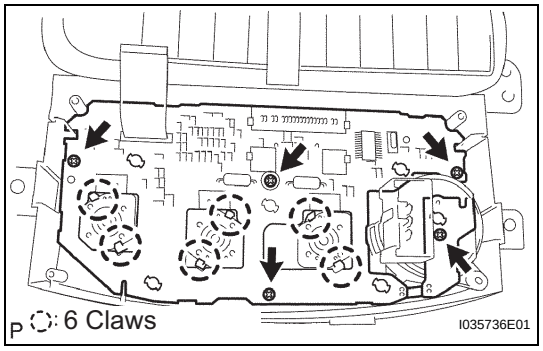

(b) Release the 6 claw fittings and remove the 5 screws and printed wire integration board sub-assembly.

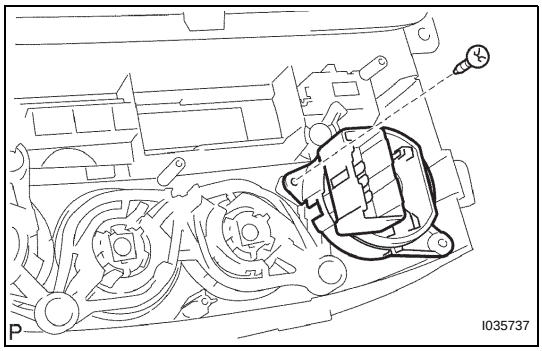

(c) Remove the screw and the heater blower switch.

AC

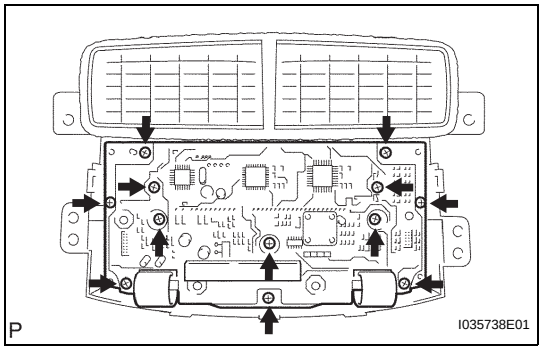

7. REMOVE PRINTED WIRE INTEGRATION BOARD SUB-ASSEMBLY (for Automatic Air Conditioning System)

(a) Remove the 12 screws and the printed wire integration board sub-assembly.

Manual A/C:

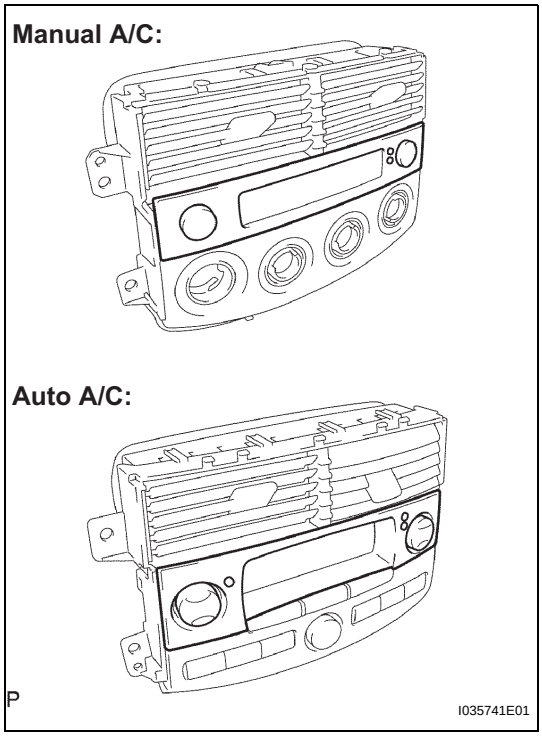

8. REMOVE CLOCK ORNAMENT

(a) Remove the clock ornament.

9. REMOVE CENTER CLUSTER MODULE KNOB NO.5 (for Automatic Air Conditioning System)

10. REMOVE CENTER CLUSTER MODULE KNOB NO.6 (for Automatic Air Conditioning System)