DTC	B0126/27	Seat Belt Buckle Switch LH Circuit Malfunction

DESCRIPTION

The seat belt buckle switch LH circuit consists of the center airbag sensor assembly and the front seat inner belt assembly LH.

DTC B0126/27 is recorded when a malfunction is detected in the seat belt buckle switch LH circuit.

DTC No.	DTC Detecting Condition	Trouble Area
B0126/27	• The center airbag sensor assembly receives a line short circuit signal, an open circuit signal, a short circuit to ground signal or a short circuit to B+ signal in the seat belt buckle switch LH circuit for 2 seconds. • Front seat inner belt assembly LH malfunction • Center airbag sensor assembly malfunction	• Front seat inner belt assembly LH (Seat belt buckle switch LH) • Center airbag sensor assembly • Floor wire

RS

WIRING DIAGRAM

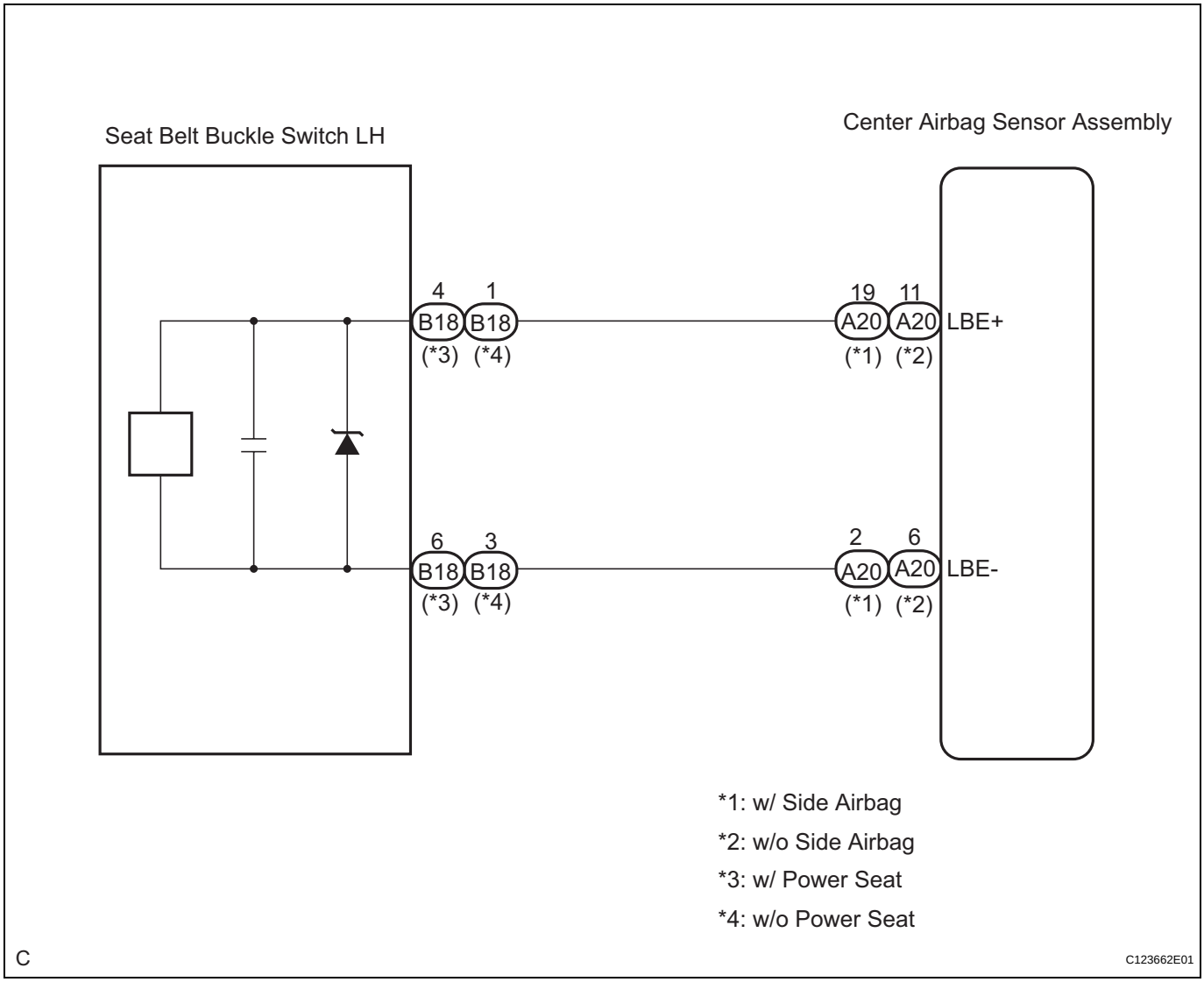

INSPECTION PROCEDURE

1	CHECK DTC

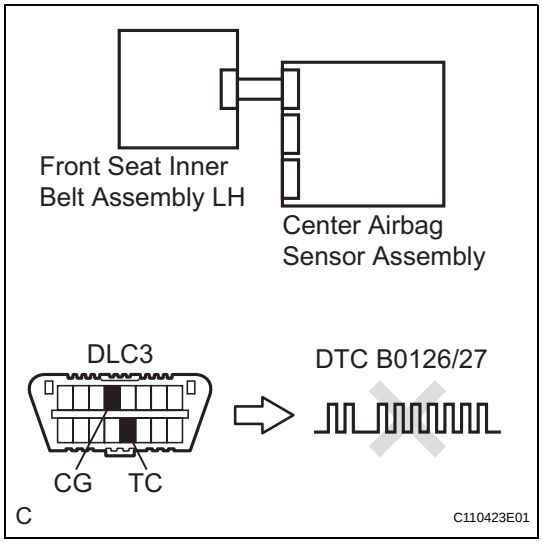

(a) Turn the ignition switch to the ON position, and wait for at least 60 seconds.
(b) Clear the DTCs stored in memory (See page RS-35).
(c) Turn the ignition switch to the LOCK position.
(d) Turn the ignition switch to the ON position, and wait for at least 60 seconds.
(e) Check the DTCs (See page RS-35).

OK:

DTC B0126/27 is not output.

HINT:

Codes other than code B0126/27 may be output at this time, but they are not related to this check.

NG → **Go to step 2**

OK

USE SIMULATION METHOD TO CHECK

2	CHECK CONNECTION OF CONNECTORS

(a) Turn the ignition switch to the LOCK position.
(b) Disconnect the negative (-) terminal cable from the battery, and wait for at least 90 seconds.
(c) Check that the connectors are properly connected to the center airbag sensor assembly and the front seat inner belt assembly LH.

OK:

The connectors are connected.

NG → **CONNECT CONNECTORS**

OK

3	CHECK VEHICLE

(a) Check the front driver seat type.

Result

Result	Proceed to
w/ Power seat	A
w/o Power seat	B

B → **Go to step 11**

A

4	CHECK FLOOR WIRE (OPEN)

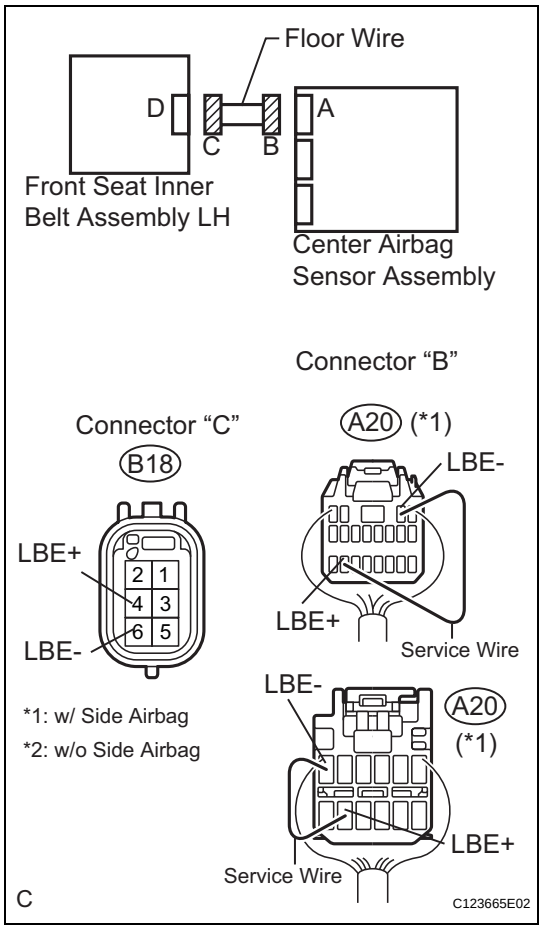

(a) Disconnect the connectors from the center airbag sensor assembly and the front seat inner belt assembly LH.

(b) w/ Side airbag:
Using a service wire, connect A20-19 (LBE+) and A20-2 (LBE-) of connector "B".
NOTICE:
Do not forcibly insert a service wire into the terminals of the connector when connecting.

(c) w/o Side airbag:
Using a service wire, connect A20-11 (LBE+) and A20-6 (LBE-) of connector "B".
NOTICE:
Do not forcibly insert a service wire into the terminals of the connector when connecting.

(d) Measure the resistance according to the value(s) in the table below.
Standard resistance

Tester connection	Condition	Specified condition
B18-4 (LBE+) - B18-6 (LBE-)	Always	Below 1 Ω

NG → **REPAIR OR REPLACE FLOOR WIRE**

OK

RS

5 CHECK FLOOR WIRE (SHORT TO B+)

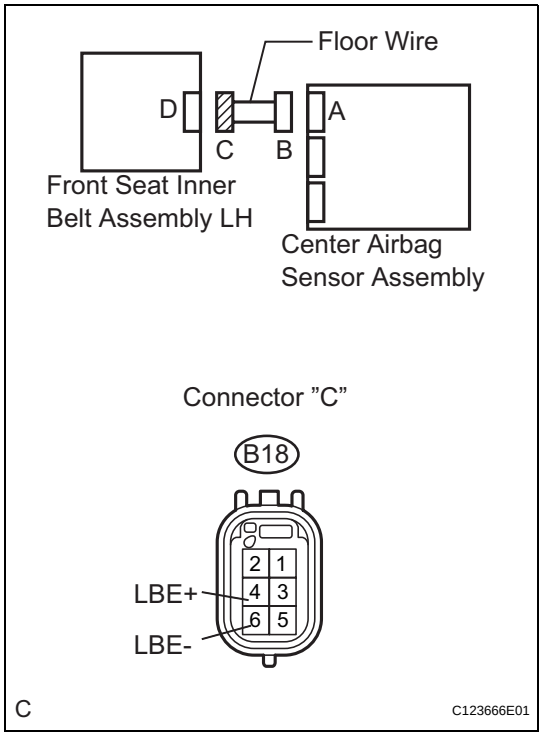

(a) Disconnect the service wire from connector "B".
(b) Connect the negative (-) terminal cable to the battery, and wait for at least 2 seconds.
(c) Turn the ignition switch to the ON position.
(d) Measure the voltage according to the value(s) in the table below.

Standard voltage

Tester connection	Condition	Specified condition
B18-4 (LBE+) - Body ground	Ignition switch ON	Below 1 V
B18-6 (LBE-) - Body ground	Ignition switch ON	Below 1 V

NG → **REPAIR OR REPLACE FLOOR WIRE**

OK

6 CHECK FLOOR WIRE (SHORT TO GROUND)

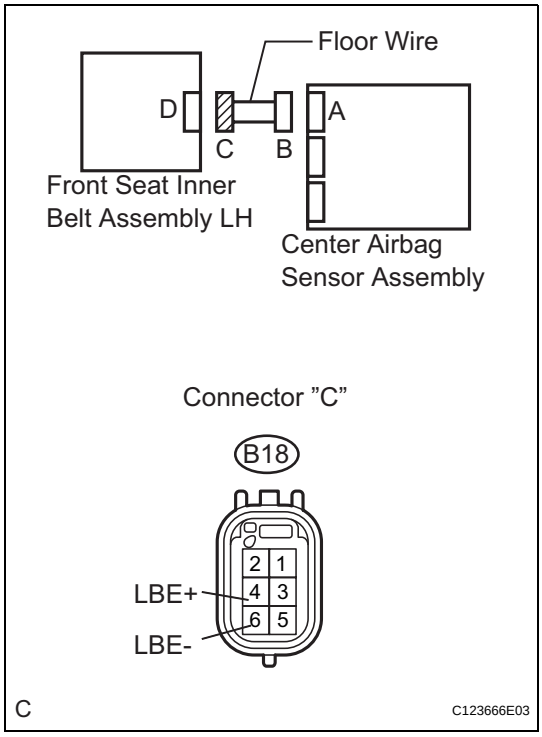

(a) Turn the ignition switch to the LOCK position.
(b) Disconnect the negative (-) terminal cable from the battery, and wait for at least 90 seconds.
(c) Measure the resistance according to the value(s) in the table below.

Standard resistance

Tester connection	Condition	Specified condition
B18-4 (LBE+) - Body ground	Always	1 MΩ or higher
B18-6 (LBE-) - Body ground	Always	1 MΩ or higher

NG → **REPAIR OR REPLACE FLOOR WIRE**

OK

7 CHECK FLOOR WIRE (SHORT)

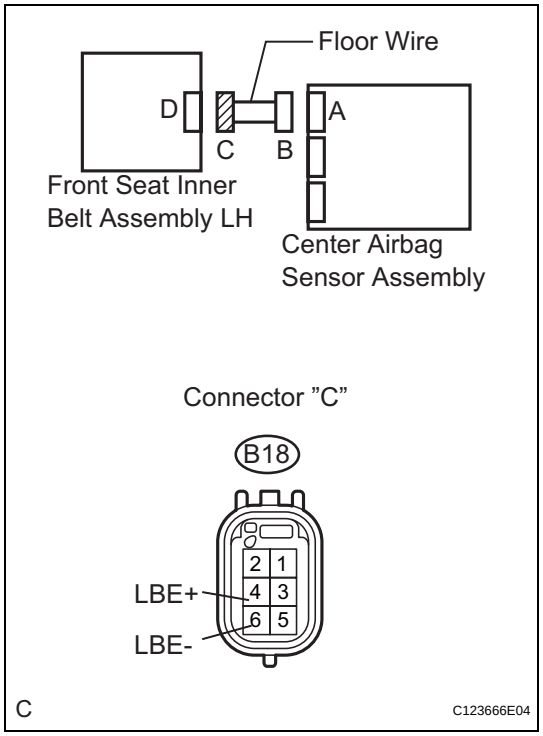

(a) Measure the voltage according to the value(s) in the table below.

Standard resistance

Tester connection	Condition	Specified condition
B18-4 (LBE+) - B18-6 (LBE-)	Always	1 MΩ or higher

NG → **REPAIR OR REPLACE FLOOR WIRE**

OK

8 CHECK FRONT SEAT INNER BELT ASSEMBLY LH

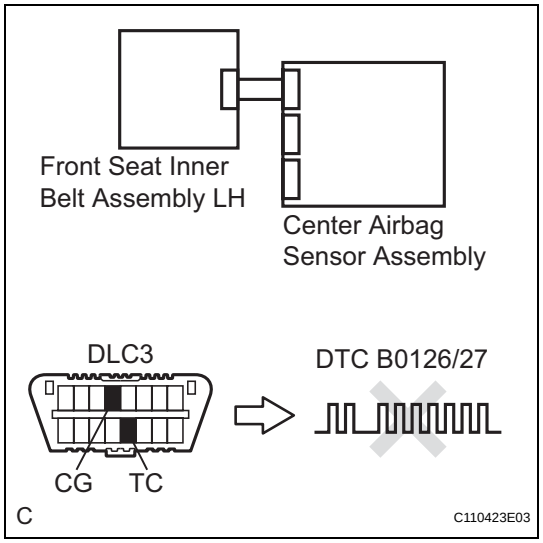

(a) Connect the connectors to the front seat inner belt assembly LH and the center airbag sensor assembly.
(b) Connect the negative (-) terminal cable to the battery, and wait for at least 2 seconds.
(c) Turn the ignition switch to the ON position, and wait for at least 60 seconds.
(d) Clear the DTCs stored in memory (See page RS-35).
(e) Turn the ignition switch to the LOCK position.
(f) Turn the ignition switch to the ON position, and wait for at least 60 seconds.
(g) Check the DTCs (See page RS-35).

OK:

DTC B0126/27 is not output.

HINT:

Codes other than code B0126/27 may be output at this time, but they are not related to this check.

NG → **Go to step 9**

OK

USE SIMULATION METHOD TO CHECK

9	REPLACE FRONT SEAT INNER BELT ASSEMBLY LH

(a) Turn the ignition switch to the LOCK position.
(b) Disconnect the negative (-) terminal cable from the battery, and wait for at least 90 seconds.
(c) Replace the front seat inner belt assembly LH (See page SB-4).
HINT:
Perform the inspection using parts from a normal vehicle if possible.

NEXT

10	CHECK CENTER AIRBAG SENSOR ASSEMBLY

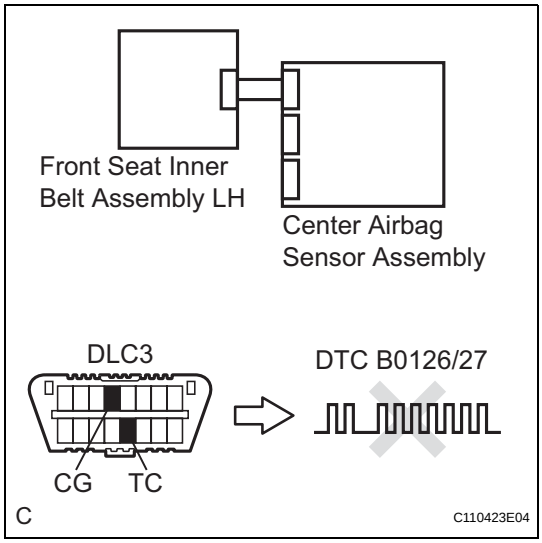

(a) Connect the negative (-) terminal cable to the battery, and wait for at least 2 seconds.
(b) Turn the ignition switch to the ON position, and wait for at least 60 seconds.
(c) Clear the DTCs stored in memory (See page RS-35).
(d) Turn the ignition switch to the LOCK position.
(e) Turn the ignition switch to the ON position, and wait for at least 60 seconds.
(f) Check the DTCs (See page RS-35).
OK:
DTC B0126/27 is output.
HINT:
Codes other than code B0126/27 may be output at this time, but they are not related to this check.

NG → **REPLACE CENTER AIRBAG SENSOR ASSEMBLY**

OK

END

11	CHECK FLOOR WIRE (OPEN)

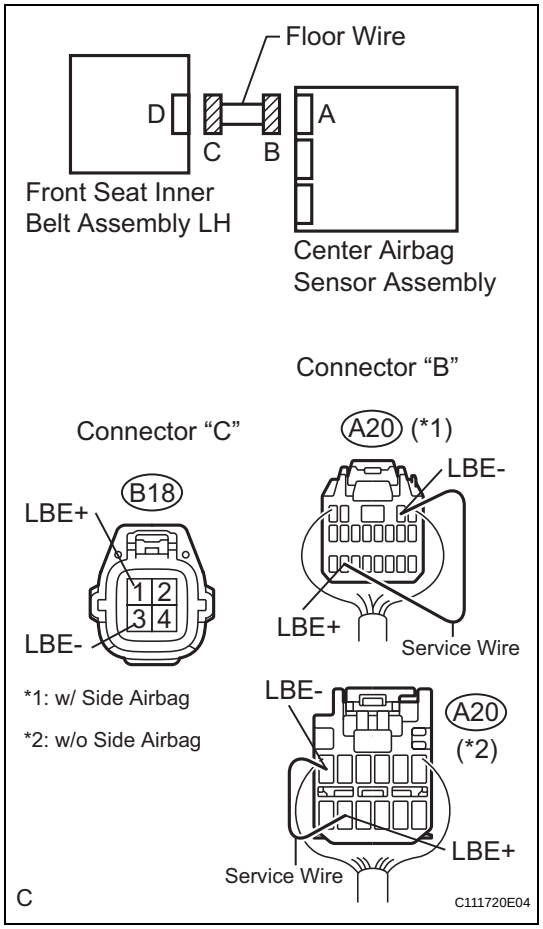

(a) Disconnect the connectors from the center airbag sensor assembly and the front seat inner belt assembly LH.

(b) w/ Side airbag:
Using a service wire, connect A20-19 (LBE+) and A20-2 (LBE-) of connector "B".
NOTICE:
Do not forcibly insert a service wire into the terminals of the connector when connecting.

(c) w/o Side airbag:
Using a service wire, connect A20-11 (LBE+) and A20-6 (LBE-) of connector "B".
NOTICE:
Do not forcibly insert a service wire into the terminals of the connector when connecting.

(d) Measure the resistance according to the value(s) in the table below.
Standard resistance

Tester connection	Condition	Specified condition
B18-1 (LBE+) - B18-3 (LBE-)	Always	Below 1 Ω

NG → **REPAIR OR REPLACE FLOOR WIRE**

OK

RS

12 CHECK FLOOR WIRE (SHORT TO B+)

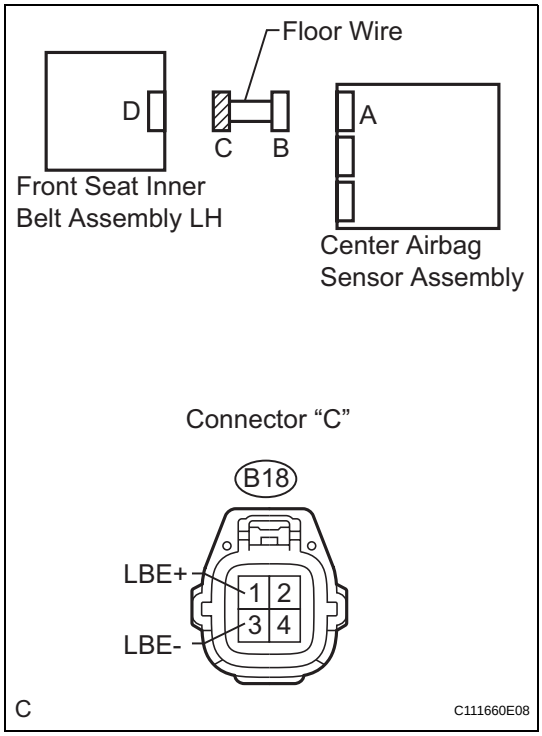

(a) Disconnect the service wire from connector "B".
(b) Connect the negative (-) terminal cable to the battery, and wait for at least 2 seconds.
(c) Turn the ignition switch to the ON position.
(d) Measure the voltage according to the value(s) in the table below.

Standard voltage

Tester connection	Condition	Specified condition
B18-1 (LBE+) - Body ground	Ignition switch ON	Below 1 V
B18-3 (LBE-) - Body ground	Ignition switch ON	Below 1 V

NG → REPAIR OR REPLACE FLOOR WIRE

OK

13 CHECK FLOOR WIRE (SHORT TO GROUND)

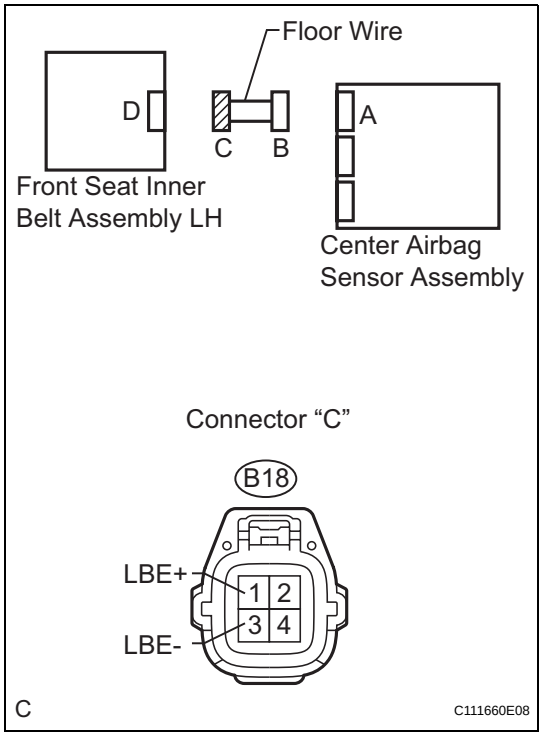

(a) Turn the ignition switch to the LOCK position.
(b) Disconnect the negative (-) terminal cable from the battery, and wait for at least 90 seconds.
(c) Measure the resistance according to the value(s) in the table below.

Standard resistance

Tester connection	Condition	Specified condition
B18-1 (LBE+) - Body ground	Always	1 MΩ or higher
B18-3 (LBE-) - Body ground	Always	1 MΩ or higher

NG → REPAIR OR REPLACE FLOOR WIRE

OK

14 CHECK FLOOR WIRE (SHORT)

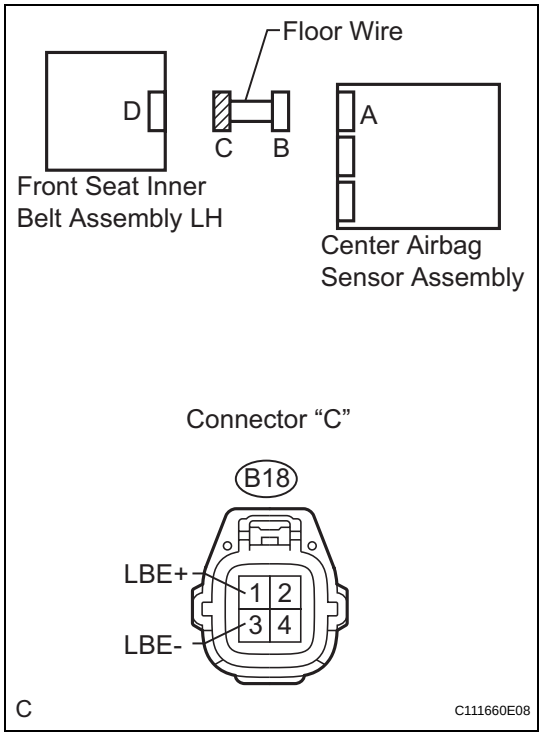

(a) Measure the resistance according to the value(s) in the table below.

Standard resistance

Tester connection	Condition	Specified condition
B18-1 (LBE+) - B18-3 (LBE-)	Always	1 MΩ or higher

NG → **REPAIR OR REPLACE FLOOR WIRE**

OK

15 CHECK FRONT SEAT INNER BELT ASSEMBLY LH

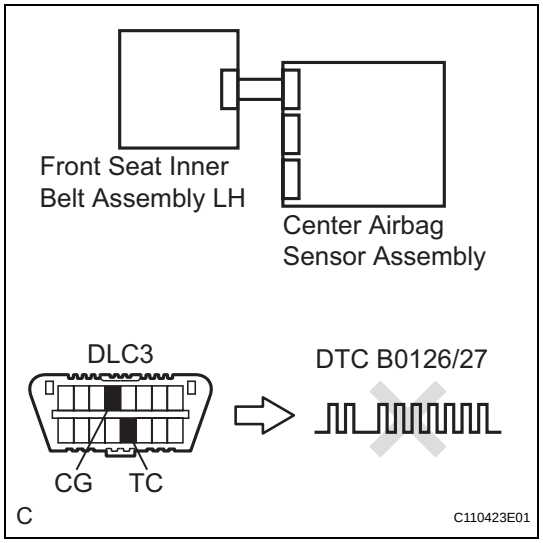

(a) Connect the connectors to the front seat inner belt assembly LH and the center airbag sensor assembly.
(b) Connect the negative (-) terminal cable to the battery, and wait for at least 2 seconds.
(c) Turn the ignition switch to the ON position, and wait for at least 60 seconds.
(d) Clear the DTCs stored in memory (See page RS-35).
(e) Turn the ignition switch to the LOCK position.
(f) Turn the ignition switch to the ON position, and wait for at least 60 seconds.
(g) Check the DTCs (See page RS-35).

OK:

DTC B0126/27 is not output.

HINT:

Codes other than code B0126/27 may be output at this time, but they are not related to this check.

NG → **Go to step 16**

OK

USE SIMULATION METHOD TO CHECK

16	REPLACE FRONT SEAT INNER BELT ASSEMBLY LH

(a) Turn the ignition switch to the LOCK position.
(b) Disconnect the negative (-) terminal cable from the battery, and wait for at least 90 seconds.
(c) Replace the front seat inner belt assembly LH (See page SB-4).
HINT:
Perform the inspection using parts from a normal vehicle if possible.

NEXT

17	CHECK CENTER AIRBAG SENSOR ASSEMBLY

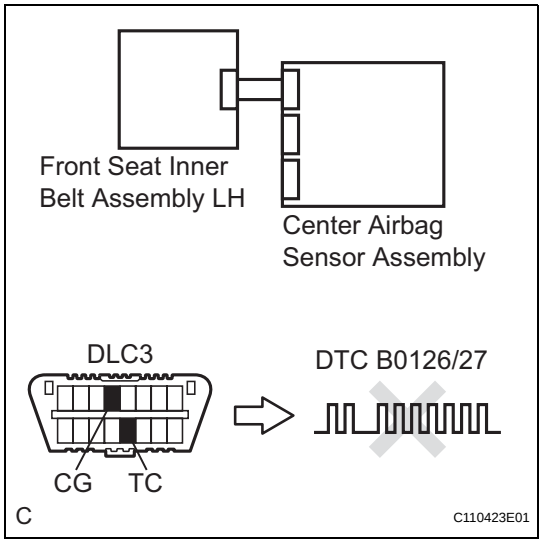

(a) Connect the negative (-) terminal cable to the battery, and wait for at least 2 seconds.
(b) Turn the ignition switch to the ON position, and wait for at least 60 seconds.
(c) Clear the DTCs stored in memory (See page RS-35).
(d) Turn the ignition switch to the LOCK position.
(e) Turn the ignition switch to the ON position, and wait for at least 60 seconds.
(f) Check the DTCs (See page RS-35).
OK:
DTC B0126/27 is not output.
HINT:
Codes other than code B0126/27 may be output at this time, but they are not related to this check.

NG → **REPLACE CENTER AIRBAG SENSOR ASSEMBLY**

OK

END